inveo

CATALOG
OF PRODUCTS 2026

I/O MODULES | TIMERS | SENSORS | ENVIRONMENTAL MONITORING



Polish manufacturer
of electronic devices

www.inveo.com.pl

How do I navigate the catalog?

This document is designed to help you quickly find the information you need about our devices. Below you will find a brief guide to the interactive features.

Quick navigation:

- **Search for a device:** No need to scroll through every page. Click the device name in the table of contents to jump directly to its description.
- **Return to the table of contents:** Want to check something else? Click the company logo in the top-right corner of any product page to return directly to the table of contents.

Active links

- **Social media icons:** Click them to visit our social media profiles.
- **Website URL:** This will take you directly to our product website.
- **QR codes:** If you're viewing the catalog on a computer, you can click the QR code or scan it with your phone to go directly to our website.



www.inveo.com.pl

inveo

Spis treści

- Key to the icons....4

Input/output Modules....5

- Technical Specifications....6
- IQIO PRO....8
- IQIO IO....10
- Daxi....11
- Cronos-timer....13
- Nano IN / Nano Digital Input PoE....14
- Nano Out / Nano Relay Output PoE....15
- Lantick PE-1-0, 0-1, 1-1....16
- Lantick PE-2-2, 0-4....17
- Lantick PE-4-4, 8-0, 0-8....18
- Lantick PE-16-0, 0-16....19
- Websensor INPUT....20
- LanKey....21

Monitoring....22

- Technical Specifications....23
- Daxi....24
- Virtus Base....26
- IQIO Pro....28
- IQIO Sens....30
- Hero Web Sensor....31
- Nano Temp / Nano Temperature Sensor PoE....32
- Nano Analog Input....33
- Nano TC Sensor....34
- Media Monitor MMO4....35

Sensors....36

- Sensors: WebSensor T | WebSensor HT | WebSensor COMBO | WebSensor INPUT....37
- DS temperature sensor in the sleeve....40
- Carbon dioxide, humidity, and temperature sensor-WebSensor CO_2HT....41
- Carbon monoxide detector-WebSensor CO....42
- Phase loss sensor- WebSensor 1 Phase....43
- Phase loss detector-1 Phase Detector....44
- Phase loss detector-3 Phase Detector....45
- Sensor adapters: 0-10 VDC-WebSensor U | 4-20 mA-WebSensor I....46
- Sensor adapter RTD PT 100 / PT 1000-WebSensor RTD....48
- 8-port expansion adapter-Bus Expander....49

Time control....51

- IQIO PRO....52
- IQIO IO....54
- Daxi....55
- Cronos-timer....57

Other device....58

- Media Converter....59
- Emulator pendrive....60

Accessories....61

- Flood sensor....62
- Reed switch....63

Key to the icons

Icon	Description	Icon	Description
	LAN socket		P2P communication – directly between devices on a one-to-one basis
	Built-in Wi-Fi		M2M communication – one-to-many device communication
	Power supply: 10–24 V DC		The device supports SSL encryption
	230 V AC power supply		Support for the logic module – the ability to create simple logical conditions, such as performing a comparison, which will allow an action to be executed
	Power over Ethernet (PoE) 802.3af, 37–57 V DC		Support for executing time-dependent actions
	Built-in LAN switch		Built-in sensor memory with a graph
	Available output channels (relay or transistor depending on the version)		Temperature Sensor Operation
	Available input channels (pre-polarized – normally open or voltage-based 10–24 V DC)		Integration of the LUA scripting language
	IP65 enclosure rating		SMS Support – SMS API
	RFID communication available		SMTP Protocol – Sending Emails
	Support for NFC communication – HF modules only, and with the Inveo iTag NFC app		ICMP Protocol – the ability to check the availability of LAN devices (ping)
	Support for the KNX-IP protocol		MQTT Protocol
	TCP/UDP Protocol		SNMP Protocol
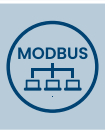	Modbus TCP/RTU protocol – depending on the available connectors		HTTP Client Protocol
	Modbus TCP Protocol		

Input/output Modules

Technical specifications	Outputs		Digital inputs		Power Supply				
Version	Number of outputs	Type of outputs	Number of inputs	Input type	Active PoE 802.3af	Passive PoE 10-24 V DC	10-24 V DC	USB C 5 V DC	230 V AC
Daxi	8	NO relay	8	biased (dry contact) / voltage input (10–24 V DC)	✓	-	✓	-	option
IQIO Pro	1	NO relay	1	biased (dry contact)	option	-	✓	✓	-
IQIO IO	1	NO relay	1	biased (dry contact)	option	-	✓	✓	-
Lantick PE-1-0	1	NO relay	-	-	-	✓	-	-	-
Lantick PE-0-1	-	-	1	biased (dry contact)	-	✓	-	-	-
Lantick PE-1-1	1	NO relay	1	biased (dry contact)	✓	-	✓	-	-
Lantick PE-2-2	2	NO/NC relay	2	voltage input (10–24 V DC) or biased (dry contact)	-	✓	✓	-	-
Lantick PE-0-4	-	-	4	voltage input (10–24 V DC) or biased (dry contact)	-	✓	✓	-	-
Lantick PE-4-4	4	NO relay	4	voltage input (10–24 V DC)	-	✓	✓	-	-
Lantick PE-8-0	8	NO relay	-	-	-	✓	✓	-	-
Lantick PE-0-8	-	-	8	voltage input (10–24 V DC)	-	✓	✓	-	-
Lantick PE-16-0	16	transistor OC	-	-	✓	✓	✓	-	-
Lantick PE-0-16	-	-	16	biased (dry contact) / voltage input (10–24 V DC)	✓	✓	✓	-	-
Nano In	-	-	1	biased (dry contact)	-	✓	-	-	-
Nano Digital Input PoE	-	-	1	biased (dry contact)	✓	-	✓	-	-
Nano Out	1	NO relay	-	-	-	✓	-	-	-
Nano Relay Output PoE	1	NO relay	-	-	✓	-	✓	-	-
Cronos	8	NO relay	-	-	-	-	-	-	✓

Protocols	HTTP	HTTP(s)	MQTT	MQTT(s)	Modbus TCP	SNMP		E-mail	SMS	SNTP	TCP/UDP	iCluster Client	iCluster Master	Reading history	Logic	Cron
						v2c	v3									
Daxi	✓	✓	✓	✓	✓	✓	✓	✓	✓	✓	✓	✓	✓	✓	✓	✓
IQIO Pro	✓	✓	✓	✓	✓	✓	✓	✓	✓	✓	✓	✓	-	✓	✓	○
IQIO IO	✓	✓	✓	✓	○	✓	○	○	○	✓	✓	✓	-	○	✓	○
Lantick (series)	✓	-	-	-	✓	✓	-	-	-	-	✓	✓	-	-	-	-
Nano In	✓	-	✓	-	✓	✓	-	-	-	-	✓	✓	-	-	-	-
Nano Out	✓	-	✓	-	✓	✓	-	-	-	-	✓	✓	-	-	-	-
Cronos	✓	-	-	-	-	✓	-	-	-	✓	✓	-	-	-	-	✓

○ - Protocol support available as a license option

Figure 1

Device name	Input type:
	Galvanically isolated, biased (dry contact) / voltage input (10–24 V DC)
Daxi	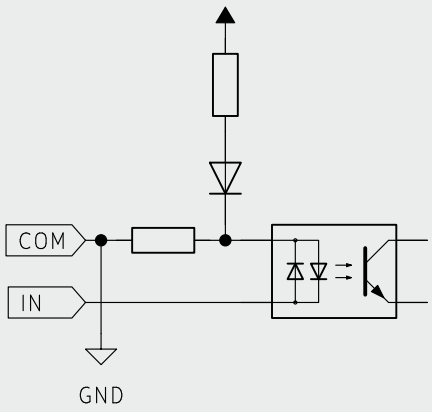
Lantick PE-0-16	

Figure 2

Device name	Input type:
	Biased (dry contact)
IQIO Pro	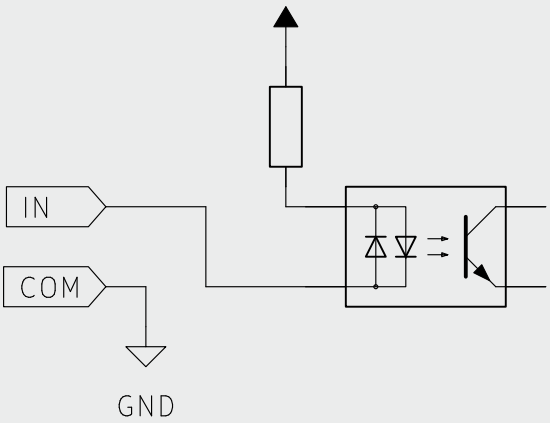
IQIO IO	
Lantick PE-0-1	
Lantick PE-1-1	
Lantick PE-2-2	
Nano In	
Nano Digital Input PoE	

Figure 3

Device name	Input type:
	Voltage input (10–24 V DC)
Lantick PE-2-2	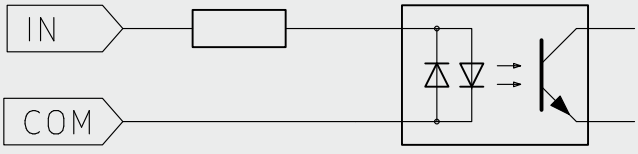
Lantick PE-4-4	
Lantick PE-0-8	

IQIO Pro

IQIO PRO is an advanced monitoring module designed to simultaneously monitor multiple physical parameters. The device combines the functions of a network sensor, a data logger, and an automation controller, offering full control over the operating environment of machines and facilities.



Application:

- **Comprehensive monitoring:** Continuous monitoring of environmental parameters in industry, agriculture, construction, and urban infrastructure.
- **Remote management:** Real-time data tracking and analysis with access via a built-in web interface.
- **Maintenance:** Monitoring of operating conditions for critical components of industrial systems.



Features:

- **Support for up to 6 sensors:** Ability to connect and simultaneously monitor up to six different physical parameters (e.g., temperature, humidity).
- **Automation and alarm thresholds:**
  Configurable actions that allow the device to automatically respond to specific events (e.g., temperature exceeding a threshold).
- **Communication and protocols:**
  - Support for secure standards: HTTP(S), MQTT(S), SNMP v2c/v3, Modbus TCP, and TCP/UDP.
  - Real-time time synchronization via the SNTP protocol.
  - Hybrid connectivity: Ethernet or Wi-Fi only for the IQIO PRO Wi-Fi version.
- **Logging and analytics:**
  - Built-in memory for local logging of readings.
  - Visualization of data history in the form of easy-to-read graphs directly in the browser.
- **Notifications:**
  Alarm system sending email and SMS messages immediately upon detecting anomalies.

  Configurable I/O: Flexible setting of input and output parameters, including response type and relay activation times.

Technical specifications

Power SupplyPower Supply	PoE: 33-57 V IEEE 802.3af (optional)	USB C: 5 V DC	10–24 V DC via a 3.5 mm detachable connector
Power Consumption	Maximum 1.5 W		
Sensor bus	3-wire cable or flat cable (when using an adapter)		Supports up to 6 sensors
	Dedicated sensors: temperature, humidity, pressure, 0–10 V analog voltage via adapter, 4–20 mA analog current via adapter, CO, CO_2, NOx		
Inputs	Number of digital inputs: 1	Input type: pre-polarized NO (normally open) (See Figure 2 on page 7)	
Outputs	1 potential-free NO relay output		Maximum operating voltage: 30 V DC
	Operating modes: bistable, astable, monostable, timer		
	Maximum channel current: 1 A		
Communication	Wi-Fi	10/100 Mbps Ethernet port, RJ45 (optional)	
Housing	Enclosure rating: IP 30	Dimensions (L/W/H): 50.1 x 74.6 x 27 mm	
Operating Temperature	From -10 °C to +55 °C		

Version	Ethernet	Wi-Fi	Catalog number
IQIO PRO Wi-Fi	-	✓	IQ-0021-10CF-00
IQIO PRO Wi-Fi ETH	✓	✓	IQ-0021-10DF-00

IQIO IO

A universal I/O module designed for remote monitoring and control via LAN or Wi-Fi. With its integrated LED display and support for multiple communication protocols, it is the ideal tool for quick integration with modern IoT systems.



Application:

- **Remote control and monitoring:** Monitoring the status of digital inputs and controlling relays over an IP network.
- **System integration:** Compatibility with BMS, alarm, and monitoring systems (system scalability).
- **Network monitoring:** ICMP Watchdog function for automatically verifying the availability of devices on the network.



Features:

- **Local interface:**
  Built-in, easy-to-read LED display (7-segment, red)
  for real-time display of device status or values.
- **Communication and configuration:**
- - Supported protocols: HTTP(S), MQTT(S), Modbus TCP, SNMP v2c/v3, and TCP/UDP.
  - Intuitive management via a built-in web server (browser).
  - Connectivity options: Ethernet (RJ45) or Wi-Fi.
- **Logic and alarms:**
  - Full configurability of input/output parameters (activation time, response type).
  - Alarm notifications sent via email and SMS (SMSAPI).
- **Design:**
  Compact housing enabling installation
  in confined spaces within control cabinets and telecommunications enclosures.

Technical specifications

Power Supply	PoE: 33-57 V IEEE 802.3af (IQIO IO ETH)	USB C: 5 V DC	10–24 V DC via a 3.5 mm detachable connector
Power Consumption	Maximum 1.5 W		
Inputs	Number of digital inputs: 1	Input type: pre-polarized (short-circuit) (See Figure 2 on page 7)	
Outputs	1 potential-free NO relay output	Maximum operating voltage: 30 V DC	
	Operating modes: bistable, astable, monostable, timer		
	Maximum channel current: 1 A		
Communication	10/100 Mbps Ethernet port, RJ45 (IQIO IO ETH)	Wi-Fi (IQIO IO Wi-Fi)	
Housing	Enclosure rating: IP 30	Dimensions (L/W/H): 50.1 x 74.6 x 27 mm	
Operating Temperature	From -10 °C to +55 °C		

Version	Ethernet	Wi-Fi	Catalog number
IQIO IO ETH	✓	-	IQ-0001-10D3-00
IQIO IO Wi-Fi	-	✓	IQ-0001-10CB-00

Daxi

Daxi is a versatile network controller that integrates advanced measurement, control, and communication functions. With its modern web interface and support for Lua scripts, the device serves as a central component in building automation, industrial automation, and IT monitoring systems.



Application:

- **Smart Building:** Control of lighting, blinds, heating, and ventilation (HVAC).
- **IT Infrastructure:** Monitoring of server rooms, telecommunications cabinets, and environmental parameters.
- **Industry:** Control of automation processes and monitoring of machine operation.
- **Network Diagnostics:** Monitoring of network devices using the ICMP protocol (Watchdog).



Features:

- **Advanced inputs and sensors:**
  - Support for multiple sensors: temperature, humidity, pressure, and gas detection.
  - Support for analog signals (current and voltage).
  - Multifunction inputs: click detection, pulse counting, and frequency measurement.
- **Automation and logic:**
  - Intuitive graphical interface for setting conditions and trigger thresholds (e.g., activating ventilation at a specified humidity threshold).
  - Extensive schedule for timed actions and built-in astronomical clock (control based on sunrise/sunset).
  - For advanced users: full programming freedom in the Lua scripting language.
- **Flexible relay outputs:** Operation in modes: standard (on/off), astable, timed, and group (dedicated to blinds and curtains).
- **Communication and integration:**
  - Modbus Agent (mbAgent): Retrieving, mapping, and transmitting data from external Modbus devices.
  - Protocols: HTTP(S), MQTT(S), Modbus TCP, SNMP v2c/v3, KNX, TCP/UDP, Syslog, and Email.
  - Ecosystem: iCluster integration (Inveo devices), compatibility with cloud systems and easy transfer of I/O statuses between devices.

  Logging and notifications: Built-in data logger with graphing and export functions, plus email and SMS messaging (via SMSAPI).
- **Design:** Built-in 2-port network switch, modern web interface, optional Wi-Fi, and 230 V AC power supply.

Technical specifications

Power Supply	PoE: 33-57 V IEEE 802.3af	230 V AC (optional)	10–24 V DC via a 3.5 mm detachable connector
Power Consumption	1.2 W – 3.5 W, depending on the number of outputs activated		
Sensor bus	2 RJ12 jacks	Supports up to 16 sensors	
	Dedicated sensors: temperature, humidity, pressure, 0–10 V analog voltage via adapter, 4–20 mA analog current via adapter, CO, CO_2, NOx gas		
Inputs	Number of digital inputs: 8	Input voltage: 10–24 V	
	Input type: pre-polarized (normally open) / voltage (10–24 V DC) (See Figure 1 on page 7)		
Outputs	8 potential-free NO relay outputs	Maximum operating voltage: 230 V AC	
	Operating modes: bistable, astable, monostable, roller shutter, timer		
	Maximum channel current: 2 A		
Communication	2 10/100 Mbps Ethernet ports, RJ45	Wi-Fi (optional)	
Housing	Enclosure rating: IP 30	Dimensions (L/W/H): 90 x 107 x 65.2 mm	
Operating Temperature	From -10 °C to +55 °C		

Version	Power supply 230 V AC	Wi-Fi	Catalog number
Daxi LED	-	-	DX-0140-0057-00
Daxi LED 230 V	✓	-	DX-0140-0077-00
Daxi LED Wi-Fi	-	✓	DX-0140-005F-00
Daxi LED Wi-Fi 230 V	✓	✓	DX-0140-007F-00

Cronos

Timer

Network-based real-time controller with an astronomical clock function. The device enables precise management of electrical circuits based on calendar schedules and the sun's position, combining the functions of a traditional timer with modern IP communication.





Application:

- **Astronomical schedules:**
  Automatically turn on lights or devices
  at sunrise and sunset (calculated based on geographic coordinates).
- **Building automation:**
  Control of HVAC systems, irrigation, and Smart Home infrastructure
  according to a precise schedule.
- **Remote control:**
  Direct management of outputs via a web interface or network commands.

Features:

- **Powerful integration:**
  Support for industrial and building standards: HTTP GET, SNMP,
  TCP/UDP, and KNX IP (routing mode).
- **Local interface:**
  An LCD display and buttons allow you to view the operating status
  and configure the network without using a computer.
- **Flexible configuration:**
  Parameters can be set via the built-in web interface, keyboard,
  or by loading a file from a USB drive.
- **Time independence:**
  A built-in real-time clock with battery backup
  ensures the continuity of schedules after a power outage.

Technical specifications

Power Supply	230 V AC	
Power Consumption	5 W	
Inputs	8 potential-free NO relay outputs	Maximum operating voltage: 250 V AC
	Operating mode: bistable, astable, monostable	Maximum current rating: 8 A
Communication	10/100 Mbps Ethernet port, RJ45	
Housing	Enclosure rating: IP 30	Dimensions (L/W/H): 90 x 104.8 x 60 mm
Operating Temperature	From -10 °C to +55 °C	

Version	Catalog number
Cronos	OT-0002-0000-00

Nano

Nano In | Nano Digital Input PoE

Compact digital input modules designed for remote monitoring of contact status via a LAN. With support for P2P functionality and multiple communication protocols, these devices serve as the foundation for distributed monitoring and automation systems.





Application:

- **Remote monitoring:**
  Monitoring the status of digital inputs (e.g., sensors, buttons, limit switches) via an Ethernet network.
- **P2P (Bridge) function:**
  Direct transmission of input status to a compatible output device (e.g., Nano Out, Lantick) without the need for an additional server.
- **System integration:**
  Compatibility with BMS, alarm, and SCADA systems.
- **Diagnostics:**
  Remote verification of the proper operation of external systems.

Features:

- **Local interface (PoE version):**
  Equipped with a 7-segment LED display,
  which provides real-time information on the input status and the module's network parameters.
- **Power supply and design:**
  - Standard version: 10–24 V DC power supply.
  - PoE version: Powered directly from the Ethernet network (Power over Ethernet).
  - Rugged, compact housing designed for installation in confined spaces.
- **Communication and protocols:**
  - Supported standards: HTTP, MQTT, SNMP, Modbus TCP, and TCP/UDP.
  - Intuitive management via a built-in web server (browser).
- **Reliability:**
  Simple, industrial design ensuring trouble-free continuous operation.

Technical specifications:

Power Supply	**Nano In**	Passive PoE 10–24 V DC, via a PoE adapter	
	Nano Digital Input PoE	PoE: 33-57 V IEEE 802.3af	DC: 10–24 V DC (3.5 mm detachable connector)
Power Consumption	Maximum 1.5 W		
Inputs	Number of entries: 1	Input type: biased (dry contact) (See Figure 2 on page 7)	Maximum counter value: 4 294 967 296
	Maximum input frequency: 1000 Hz		
Communication	10 Mbps Ethernet port, RJ45		
Housing	**Nano In**	Dimensions (L/W/H): 50 x 66.3 x 20 mm	Enclosure rating: IP30
	Nano Digital Input PoE	Dimensions (L/W/H): 50.1 x 74.6 x 27 mm	
Operating Temperature	From -10 °C to +55 °C		

Version	Passive PoE 10-24 V DC	Active PoE 802.3af	10-24 V DC	Catalog number
Nano In	✓	-	-	NN-0001-2001-00
Nano Digital Input PoE	-	✓	✓	NN-0001-00D1-00

Nano

Nano Out | Nano Relay Output PoE

Compact actuator modules equipped with a relay output, designed for remote control of electrical devices via a LAN network. Thanks to support for P2P functionality, they enable wireless (network-based) extension of control signals over long distances.





Application:

- **Remote control:** Turning electrical circuits on and off (e.g., lighting, gates, locks, ventilation) via Ethernet.
- **P2P (Bridge) function:** Automatic mapping of the input status from a compatible device (e.g., Nano In, Lantick) to a local relay.
- **System integration:** Compatibility with BMS, SCADA systems, as well as alarm and monitoring systems.
- **Diagnostics and reset:** Ability to perform remote system diagnostics and restart devices by controlling the power supply.

Features:

- **Local interface (PoE version):**
  a 7-segment LED display, showing the current output status and the module's network parameters (e.g., IP address).
- **Power supply and installation:**
  - Standard version: 10–24 V DC power supply.
  - PoE version: Power supplied directly via the network cable (Power over Ethernet).
  - Compact dimensions for easy installation in confined spaces (e.g., electrical boxes, telecommunications cabinets).
- **Communication and protocols:**
  - Supported standards: HTTP, Modbus TCP, MQTT, SNMP, and TCP/UDP.
  - Intuitive management via a built-in web server (web browser).
- **Reliability:**
  Robust construction ensuring high durability and stable operation in demanding installations.

Parametry techniczne

Power Supply	**Nano Out**	Passive PoE 10–24 V DC, via a PoE adapter	
	Nano Relay Output PoE	PoE: 33-57 V IEEE 802.3af	DC: 10–24 V DC (3.5 mm detachable connector)
Power Consumption	Maximum 1.5 W		
Outputs	Number of outputs: 1	Output type: NO relay	Maximum current: 1 A at 30 V DC
Communication	10 Mbps Ethernet port, RJ45		
Housing	**Nano Out**	Dimensions (L/W/H): 50 x 66.3 x 20 mm	Klasa obudowy: IP30
	Nano Relay Output PoE	Dimensions (L/W/H): 50.1 x 74.6 x 27 mm	
Operating Temperature	From -10 °C to +55 °C		

Version	Passive PoE 10-24 V DC	Active PoE 802.3af	10-24 V DC	Catalog number
Nano Out	✓	-	-	NN-0001-2002-00
Nano Relay Output PoE	-	✓	✓	NN-0001-00D2-00

Lantick

PE-1-0 | PE-0-1 | PE-1-1

A series of professional I/O modules designed to control and monitor signals over an Ethernet network. With support for advanced automation protocols, these devices integrate seamlessly with both IT infrastructure and modern smart building systems.



Application:

Remote Control (PE-1-0, PE-1-1): Turning electrical devices on and off via a relay output.

Status Monitoring (PE-0-1, PE-1-1): Reading the status of digital inputs (e.g., door/window sensors, push buttons, limit switches) over LAN.

BMS and Alarm Integration: Integration with building management systems, monitoring systems, and security systems.

System Diagnostics: Remote verification of the proper operation of remote installations.



Features:

Comprehensive communication: Supports the following standards: HTTP, Modbus TCP, SNMP, TCP/UDP, and KNX IP (routing mode).

Inveo Dashboard: Compatibility with a data visualization platform, enabling real-time monitoring of all inputs/outputs.

Remote management: A built-in web server enables full configuration and control from any web browser.

Reliability and Scalability: A robust industrial design ensures durability, and protocol consistency allows for easy system expansion with additional modules as needs grow.

Intuitive operation: A clear user interface allowing for quick device deployment without advanced programming knowledge.

Technical specifications

Power Supply	**Lantick PE-0-1, PE-1-0**	Passive PoE 10–24 V DC, via a PoE adapter		
	Lantick PE-1-1	PoE: 33-57 V IEEE 802.3af	DC: 10–24 V DC (3.5 mm detachable connector)	
Power Consumption	Maximum 1.5 W			
Inputs (Lantick PE-1-1, PE-0-1)	biased (dry contact) (See Figure 2 on page 7)	Maximum counter value: 4 294 967 296	Maximum input frequency: 1000 Hz	
Outputs (Lantick PE-1-1, PE-1-0)	Output type: relay	Maximum operating voltage: 30 V DC	Maximum current: 1 A	
	NO (normally open) output	Operating mode: bistable, astable, monostable (single trigger)		
Communication	Port Ethernet 10Mbps, RJ45			
Housing	**Lantick PE-0-1, PE-1-0**	Dimensions (L/W/H): 50 x 66.3 x 20 mm	Enclosure rating: IP 30	
	Lantick PE-1-1	Dimensions (L/W/H): 50.1 x 74.6 x 27 mm		
Operating Temperature	From -10 °C to +55 °C			

Version	Input	Output	10-24 V DC	PoE 802.3af	PassivePoE 10-24 V DC	Catalog number
Lantick PE-0-1	-	1	-	-	✓	LN-0001-2001-00
Lantick PE-1-0	1	-	-	-	✓	LN-0001-2002-00
Lantick PE-1-1	1	1	✓	✓	-	LN-0001-0003-00

Lantick

PE-2-2 | PE-0-4

Multifunctional communication modules designed for advanced monitoring and control of digital signals over Ethernet. Equipped with enclosures suitable for industrial mounting, they serve as a reliable component of professional control cabinets.



Application:

Remote Management (PE-2-2): Independent control of two relay outputs and monitoring of the status of two digital inputs.

Multi-Channel Monitoring (PE-0-4): Monitoring of four digital inputs (e.g., alarm conditions, limit switches) via a LAN network.

System integration: Full compatibility with BMS, SCADA, and modern smart building systems.

Diagnostics and monitoring: Continuous verification of the status of peripheral devices in distributed automation systems.



Features:

Industry standards: Supported protocols: HTTP, Modbus TCP, SNMP, TCP/UDP, and KNX IP (routing mode).

Inveo Dashboard: Compatibility with a data visualization platform that allows real-time monitoring of the status of all inputs/outputs.

Signal security: Digital inputs equipped with optocouplers, ensuring protection of the device against interference and surges in the system.

Remote configuration: Management of all device parameters via a built-in web server accessible from any browser.

Professional design: A robust housing with a DIN rail mount, ensuring easy installation and durability in industrial environments.

Scalability: The system can be freely expanded with additional Lantick units while maintaining communication consistency.

Technical specifications

Power Supply	Passive PoE 10-24 V DC	DC: 10–24 V DC (3.5 mm screw terminal)	
Power Consumption	Maximum 1.5 W		
Inputs (Lantick PE-2-2, PE-0-4)	voltage input (10–24 V DC) or biased (dry contact) (See Figures 2 and 3 on page 7)	Maximum counter value: 4 294 967 296	Maximum input frequency: 1000 Hz
Outputs (Lantick PE-2-2)	Output type: NO/NC relay	Maximum channel current: 4 A	
	Operating mode: bistable, astable, monostable (single-shot)	Maximum voltage: 250 V AC	
Communication	10 Mbps Ethernet port, RJ45		
Housing	Enclosure rating: IP 30	Dimensions (L/W/H): 90 x 52.5 x 65 mm	
Operating Temperature	From -10 °C to +55 °C		

Version	Inputs	Outputs	Catalog number
Lantick PE-2-2	2	2	LN-0002-2043-00
Lantick PE-0-4	4	-	LN-0008-2041-00

Lantick

PE-4-4 | PE-8-0 | PE-0-8

Advanced, multi-channel network controllers designed for comprehensive monitoring and control in large-scale automation systems. By supporting up to 8 channels in a single enclosure, these devices allow for significant space optimization in control cabinets while maintaining full communication functionality.

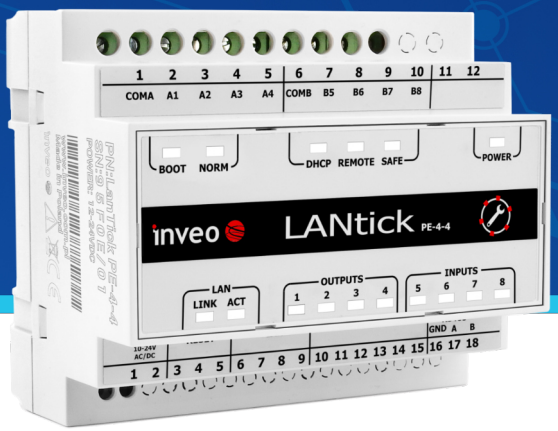

KNX MODBUS TCP TCP UDP

Application:

- **Remote control (PE-4-4, PE-8-0):** Independent management of multiple electrical circuits (lighting, drives, power supply) via an Ethernet network.
- **Multi-channel monitoring (PE-4-4, PE-0-8):** Simultaneous status reading of multiple digital inputs (e.g., alarm sensors, machine operating statuses).
- **Building automation (BMS):** Centralized control and monitoring in large commercial and residential facilities.
- **System integration:** Interoperability with advanced SCADA systems, access control, and environmental monitoring.

Features:

- **Full interoperability:** Support for industrial protocols: HTTP, Modbus TCP, SNMP, TCP/UDP, and KNX IP (routing mode).
- **Inveo Dashboard:** Compatibility with a data visualization platform, enabling real-time monitoring of the status of all inputs/outputs.
- **Remote management:** Convenient parameter configuration and output control directly via the built-in web interfaceIndustrial design: Durable housing with a dedicated DIN rail mount, ensuring stable installation and a long service life.
- **Scalability:** Ability to easily connect multiple Lantick modules into a single cohesive system managed via a LAN network.
- **Reliability:** Robust design dedicated to continuous operation in professional automation installations.

Technical specifications

Power Supply	Passive PoE 10-24 V DC	DC: 10–24 V DC (3.5 mm screw terminal)
Power Consumption	1.5–4.2 W, depending on the number of outputs activated	
Inputs (Lantick PE-4-4, PE-0-8)	Input type: voltage input (10–24 V DC) (See Figures 2 and 3 on page 7)	Input voltage: 10–24 V
	Maximum counter value: 4 294 967 296	Maximum input frequency: 1000 Hz
Outputs (Lantick PE-4-4, PE-8-0)	Output type: relay, NO	Maximum relay load: 2 A
	Operating modes: bistable, astable, monostable (single-shot), latch	Maximum voltage: 250 V AC
Communication	10 Mbps Ethernet port, RJ45	
Housing	Enclosure rating: IP 30	Dimensions (L/W/H): 90 x 104.8 x 65 mm
Operating Temperature	From -10 °C to +55 °C	

Version	Inputs	Outputs	Catalog number
Lantick PE-4-4	4	4	LN-0008-2043-00
Lantick PE-8-0	-	8	LN-0040-2042-00
Lantick PE-0-8	8	-	LN-0040-2041-00

Lantick

PE-16-0 | PE-0-16

Professional network modules offering a record-breaking 16 channels in a single housing. They are designed for systems that require the consolidation of a large number of digital signals and fast transistor control, allowing for maximum space savings in control cabinets.

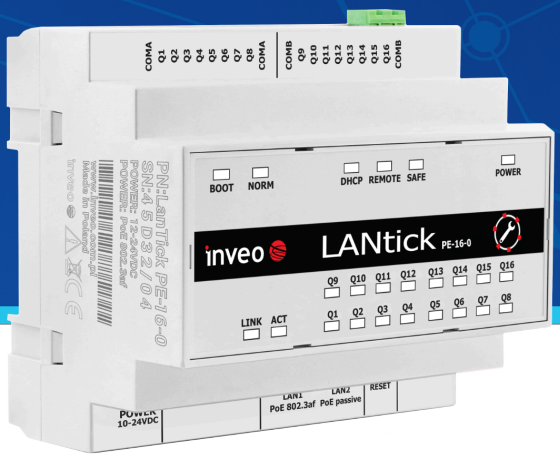

Application:

- **Remote control (PE-16-0):** Control of 16 transistor outputs (e.g., valves, indicators, PLC inputs).
- **Mass monitoring (PE-0-16):** Simultaneous monitoring of 16 digital inputs (e.g., sensors, production lines).
- **BMS systems**: Centralization of data and control in large-scale facilities.
- **Integration and diagnostics:** Connecting external systems to a modern LAN/IP network.



Features:

- **High-speed control (PE-16-0):** Open-collector (OC) transistor outputs enable faster switching and a longer service life compared to traditional relays.
- **Advanced communication:** Support for protocols: HTTP, Modbus TCP, SNMP, TCP/UDP, and KNX IP (routing mode).
- **Inveo Ecosystem:** Full support for Inveo Dashboard, enabling clear visualization of all 16 channels on a single screen.
- **Remote configuration:** Full management via a built-in web server (configuration of inputs, output modes, and network parameters).
- **Professional installation:** Compact DIN-rail housing, ideal for densely packed telecom and automation cabinets.
- **Reliability:** Design optimized for continuous operation (24/7) in demanding industrial environments.

Technical specifications

Power Supply	PoE: 33-57 V IEEE 802.3af	Passive PoE 10-24 V DC	DC: 10–24 V (3.5 mm detachable connector)
Power Consumption	1-2 W		
Inputs (Lantick PE-0-16)	Input type: voltage input (10–24 V DC) or biased (dry contact) (See Figures 1 and 3 on page 7)		
Outputs (Lantick PE-16-0)	Output type: transistor	Output voltage: 5–28 V	Maximum operating current: 1.7 A per channel
Communication	10 Mbps Ethernet port, RJ45	Built-in switch for connecting additional devices	
Housing	Enclosure rating: IP30	Dimensions (L/W/H): 90 x 104.8 x 65 mm	
Operating Temperature	From -10 °C to +55 °C		

Version	Inputs	Outputs	Catalog number
Lantick PE-16-0	-	16	LN-0100-0052-00
Lantick PE-0-16	16	-	LN-0100-0051-00

WebSensor INPUT

A compact expansion module designed to work with controllers from the Hero, Virtus, Daxi, and IQIO series. It allows for a quick and cost-effective increase in the number of monitored points in the system by adding two additional digital inputs.





Application:

- **System expansion:**
  Increasing the number of digital inputs in base modules without the need for additional IP units.
- **Security monitoring:**
  Flood detection (using a sensor) and monitoring of door and window openings (reed switches).
- **IoT and M2M solutions:**
  Integration of simple binary signals with advanced automation and cloud systems.

Features:

- **Full compatibility:**
  A device designed to work with the Inveo ecosystem (Virtus, Daxi, IQIO, and Hero Web Sensor series).
- **Additional channels:**
  Supports 2 independent digital inputs (potential-free contact).
- **Simple integration:**
  Enables easy transmission of sensor status information to the master unit.
- **Flexible installation:**
  Available with various cable types and lengths, making it easy to adapt to the conditions at the installation site.

Technical specifications

WebSensor INPUT	Input Type 1	Contact digital input - supports connection of a door-open sensor
	Input Type 2	Digital leakage input - supports connection of a flood sensor

Version	Digital Inputs Contact and Leakage	Catalog number
WebSensor Input	✓	WS-0002-0001-00
WebSensor WebSensor Input - 3-wire sensor, 1 m	✓	WS-0002-0101-00
WebSensor WebSensor Input - 3-wire sensor, 5 m	✓	WS-0012-0101-00
WebSensor WebSensor Input - 3-wire sensor, 10 m	✓	WS-0082-0101-00
WebSensor WebSensor Input - RJ12 sensor, 1 m	✓	WS-0002-0401-00
WebSensor WebSensor Input - RJ12 sensor, 5 m	✓	WS-0012-0401-00
WebSensor WebSensor Input - RJ12 sensor, 10 m	✓	WS-0082-0401-00

LanKey Console K3

The LanKey K3 is a unique I/O module equipped with a physical user interface. It combines the functionality of a remote control with that of a local operator console, enabling direct interaction with automation systems and BMS via programmable keys and visual and audible indicators.



Application:

- **Local control:**
  Manual triggering of scenes and actions in smart building systems using dedicated buttons.
- **Status indication:**
  Visual and audible notifications regarding alarms or system status (LEDs + buzzer).
- **System integration:**
  Interoperability with building management, alarm, and monitoring systems.
- **Remote diagnostics and control:**
  Device management via LAN from any location.

HTTP Client · SNMP protocol · KNX · MODBUS TCP · TCP UDP

Features:

- **Physical interface:**
  - Rugged metal keypad with three programmable keys designed for long-term durability.
  - Three configurable LED indicators and a built-in buzzer for event signaling.
- **Communication and protocols:**
  - Support for standards: HTTP, Modbus TCP, SNMP, TCP/UDP, KNX IP, and Inveo Dashboard.
  - Built-in web server for easy configuration and remote management via a web browser.
- **Flexibility:**
  - Ability to freely assign functions to keys and indicators (system scalability).
  - Intuitive user interface facilitating daily operation.
- **Reliability:**
  Robust construction designed for use in systems requiring high mechanical resistance.

Technical specifications

Power Supply	Passive PoE 10-24 V DC	
Power Consumption	Maximum 2 W	
Input channels	3 metal buttons	
Output channels	3 green LED lights	Buzzer
Communication	10 Mbps Ethernet port, RJ45	
Housing	Enclosure rating: IP 30	Dimensions (L/W/H): 71 x 71 x 27 mm
Operating Temperature	From -10 °C to +55 °C	

Version	Catalog number
LanKey K3	LN-0004-2800-00

Monitoring

Protocols / Device name	HTTP Client	HTTPS Client	HTTP Server	HTTPS Server	MQTT	MQTTS	SNMP v2c	SNMP v3	E-mail (SMTP)	SSL/TLS	SMS API	History	Syslog
Daxi	✓	✓	✓	✓	✓	✓	✓	✓	✓	✓	✓	✓	✓
Virtus	✓	✓	✓	✓	✓	✓	✓	✓	✓	✓	✓	✓	✓
IQIO Pro	✓	✓	✓	✓	✓	✓	✓	✓	✓	✓	✓	✓	○
IQIO Sens	○	○	✓	✓	✓	✓	✓	○	✓	✓	○	○	○
HERO Web Sensor	✓	-	✓	-	✓	-	✓	-	✓	-	-	✓	✓
Media Monitor	-	-	✓	-	-	-	✓	-	-	-	-	✓	-
Nano Analog Input	✓	-	✓	-	✓	-	-	-	-	-	-	-	-
Nano TC Sensor	✓	-	✓	-	✓	-	-	-	-	-	-	-	-
Nano Temp	✓	-	✓	-	✓	-	-	-	-	-	-	-	-

○ – Protocol support available via license.

Measured quantities / Device name	Temperature	Humidity	Thermocouple	RTD (PT100, PT1000)	Voltage 0–10 V	Current 4–20 mA	Flooding	Air pressure	Water pressure	Door open (reed switch)	Light intensity	CO	CO2	NOx	Phase loss 1-phase/3-phase
Daxi	✓	✓	✓	✓	✓	✓	✓	✓	✓	✓	✓	✓	✓	✓	✓
Virtus	✓	✓	✓	✓	✓	✓	✓	✓	✓	✓	✓	✓	✓	✓	✓
IQIO Pro	✓	✓	✓	✓	✓	✓	✓	✓	✓	✓	✓	✓	✓	✓	✓
IQIO Sens	✓	✓	✓	✓	✓	✓	✓	✓	✓	✓	✓	✓	✓	✓	✓
HERO Web Sensor	✓	✓	-	-	-	-	-	-	-	-	-	-	-	-	-
Media Monitor	-	-	-	-	-	-	-	-	-	-	-	-	-	-	-
Nano Analog Input	-	-	-	-	✓	✓	-	-	-	-	-	-	-	-	-
Nano TC Sensor	✓	-	✓	✓	-	-	-	-	-	-	-	-	-	-	-
Nano Temp	✓	-	-	-	-	-	-	-	-	-	-	-	-	-	-

Daxi

Daxi is a versatile network controller that integrates advanced measurement, control, and communication functions. With its modern web interface and support for Lua scripts, the device serves as a central component in building automation, industrial automation, and IT monitoring systems.



Application:

- **Smart Building:** Control of lighting, blinds, heating, and ventilation (HVAC).
- **IT Infrastructure:** Monitoring of server rooms, telecommunications cabinets, and environmental parameters.
- **Industry:** Control of automation processes and monitoring of machine operation.
- **Network Diagnostics:** Monitoring of network devices using the ICMP protocol (Watchdog).



Features:

- **Advanced inputs and sensors:**
  - Support for multiple sensors: temperature, humidity, pressure, and gas detection.
  - Support for analog signals (current and voltage).
  - Multifunction inputs: click detection, pulse counting, and frequency measurement.
- **Automation and logic:**
  - Intuitive graphical interface for setting conditions and trigger thresholds (e.g., activating ventilation at a specified humidity threshold).
  - Extensive schedule for timed actions and built-in astronomical clock (control based on sunrise/sunset).
  - For advanced users: full programming freedom in the Lua scripting language.
- **Flexible relay outputs:** Operation in modes: standard (on/off), astable, timed, and group (dedicated to blinds and curtains).
- **Communication and integration:**
  - Modbus Agent (mbAgent): Retrieving, mapping, and transmitting data from external Modbus devices.
  - Protocols: HTTP(S), MQTT(S), Modbus TCP, SNMP v2c/v3, KNX, TCP/UDP, Syslog, and Email.
  - Ecosystem: iCluster integration (Inveo devices), compatibility with cloud systems and easy transfer of I/O statuses between devices.

  Logging and notifications: Built-in data logger with graphing and export functions, plus email and SMS messaging (via SMSAPI).
- **Design:** Built-in 2-port network switch, modern web interface, optional Wi-Fi, and 230 V AC power supply.

Technical specifications

Power Supply	PoE: 33-57 V IEEE 802.3af	230 V AC (optional)	10–24 V DC via a 3.5 mm detachable connector
Power Consumption	1.2 W – 3.5 W, depending on the number of outputs activated		
Sensor bus	2 RJ12 jacks	Supports up to 16 sensors	
	Dedicated sensors: temperature, humidity, pressure, 0–10 V analog voltage via adapter, 4–20 mA analog current via adapter, CO, CO_2, NOx gas		
Inputs	Number of digital inputs: 8	Input voltage: 10–24 V	
	Input type: pre-polarized (normally open) / voltage (10–24 V DC) (See Figure 1 on page 7)		
Outputs	8 potential-free NO relay outputs	Maximum operating voltage: 230 V AC	
	Operating modes: bistable, astable, monostable, roller shutter, timer		
	Maximum channel current: 2 A		
Communication	2 10/100 Mbps Ethernet ports, RJ45	Wi-Fi (optional)	
Housing	Enclosure rating: IP 30	Dimensions (L/W/H): 90 x 107 x 65.2 mm	
Operating Temperature	From -10 °C to +55 °C		

Version	Power supply 230 V AC	Wi-Fi	Catalog number
Daxi LED	-	-	DX-0140-0057-00
Daxi LED 230 V	✓	-	DX-0140-0077-00
Daxi LED Wi-Fi	-	✓	DX-0140-005F-00
Daxi LED Wi-Fi 230 V	✓	✓	DX-0140-007F-00

Virtus Base

Virtus Base is an automation and monitoring controller designed for installation in professional telecommunications cabinets. It combines the functions of a logic controller, a communication gateway, and a data logger, serving as the heart of modern IT infrastructure and building automation management systems.



Application:

- **IT Management:** Comprehensive monitoring of server rooms and 19" rack cabinets.
- **Process Automation:** Control and supervision of advanced technical processes.
- **Environmental Monitoring:** Multi-point measurement of environmental parameters.



Features:

- **Advanced Logic and Automation:**
  - Lua Programming: Access to a scripting language for the most demanding algorithms.
  - Schedules and Astronomical Clock: Implementation of time-based dependencies and control based on sunrise and sunset times.
  - Event logic: An intuitive graphical interface for defining trigger thresholds (e.g., automatic ventilation when humidity exceeds a threshold).
- **Versatile Inputs and Outputs:**
  - Smart Inputs: Short/long click detection, pulse counting, and frequency measurement.
  - Relay Modes (NO/NC): Standard, astable, timed, and group control (blinds/curtains).
- **Communication and integration:**
  - Multi-protocol: Support for HTTP(S), MQTT(S), SNMP v2c/v3, KNX, Modbus TCP, Modbus RTU, Syslog, and TCP/UDP.
  - mbAgent (Modbus): Advanced mapping and data transfer between external devices and the master system.
  - Ecosystem: Support for iCluster (integration of Inveo devices) and easy exchange of I/O states with external systems.
- **Monitoring and notifications:**
  - Data logger: Recording readings, generating graphs, and exporting data for analysis.
  - Alarms: Real-time email and SMS (SMSAPI) notifications.
  - ICMP Watchdog: Active monitoring of network device availability.
- **Design:** Professional 1U metal enclosure designed for installation in 19" racks and a modern web interface.

Technical specifications

Power Supply	PoE: 33-57 V IEEE 802.3af	48 V DC	10–24 V DC via a 3.5 mm detachable connector
Power Consumption	Maximum 2 W		
Sensor bus	2 RJ12 jacks / detachable 3.5 mm jacks	Supports up to 32 sensors	
	Dedicated sensors: temperature, humidity, pressure, 0–10 V analog voltage, 4–20 mA analog current, CO, CO_2, NOx		
Inputs	Number of digital inputs: 4	Input voltage: 10–24 V	
	Input type: pre-polarized normally open		
Outputs	2 potential-free NO/NC relay outputs	Maximum operating voltage: 30 V DC	
	Operating modes: bistable, astable, monostable, roller shutter, timer		
	Maximum channel current: 1 A		
Communication	10/100 Mbps Ethernet port, RJ45	1 port RS485, Modbus RTU	
	Evenness: None, Odd, Even, Mark, Space, 2 Stops	Transmission speed: 1,200–115,200 bps	
Housing	Enclosure rating: IP 30		
Operating Temperature	From -10 °C to +55 °C		

Version	Catalog number
Virtus Base	DX-000A-0853-00

IQIO Pro

IQIO PRO is an advanced monitoring module designed to simultaneously monitor multiple physical parameters. The device combines the functions of a network sensor, a data logger, and an automation controller, offering full control over the operating environment of machines and facilities.



Application:

- **Comprehensive monitoring:** Continuous monitoring of environmental parameters in industry, agriculture, construction, and urban infrastructure.
- **Remote management:** Real-time data tracking and analysis with access via a built-in web interface.
- **Maintenance:** Monitoring of operating conditions for critical components of industrial systems.



Features:

- **Support for up to 6 sensors:** Ability to connect and simultaneously monitor up to six different physical parameters (e.g., temperature, humidity).
- **Automation and alarm thresholds:**
  Configurable actions that allow the device to automatically respond to specific events (e.g., temperature exceeding a threshold).
- **Communication and protocols:**
  - Support for secure standards: HTTP(S), MQTT(S), SNMP v2c/v3, Modbus TCP, and TCP/UDP.
  - Real-time time synchronization via the SNTP protocol.
  - Hybrid connectivity: Ethernet or Wi-Fi only for the IQIO PRO Wi-Fi version.
- **Logging and analytics:**
  - Built-in memory for local logging of readings.
  - Visualization of data history in the form of easy-to-read graphs directly in the browser.
- **Notifications:**
  Alarm system sending email and SMS messages immediately upon detecting anomalies.

  Configurable I/O: Flexible setting of input and output parameters, including response type and relay activation times.

Technical specifications

Power SupplyPower Supply	PoE: 33-57 V IEEE 802.3af (optional)	USB C: 5 V DC	10–24 V DC via a 3.5 mm detachable connector
Power Consumption	Maximum 1.5 W		
Sensor bus	3-wire cable or flat cable (when using an adapter)		Supports up to 6 sensors
	Dedicated sensors: temperature, humidity, pressure, 0–10 V analog voltage via adapter, 4–20 mA analog current via adapter, CO, CO_2, NOx		
Inputs	Number of digital inputs: 1	Input type: pre-polarized NO (normally open) (see Figure 2 on page 7)	
Outputs	1 potential-free NO relay output		Maximum operating voltage: 30 V DC
	Operating modes: bistable, astable, monostable, timer		
	Maximum channel current: 1 A		
Communication	Wi-Fi	10/100 Mbps Ethernet port, RJ45 (optional)	
Housing	Enclosure rating: IP 30	Dimensions (L/W/H): 50.1 x 74.6 x 27 mm	
Operating Temperature	From -10 °C to +55 °C		

Version	Ethernet	Wi-Fi	Catalog number
IQIO PRO Wi-Fi	-	✓	IQ-0021-10CF-00
IQIO PRO Wi-Fi ETH	✓	✓	IQ-0021-10DF-00

IQIO Sens

IQIO Sens is a high-precision measurement module designed for continuous monitoring of physical parameters and data transmission over a LAN network. Thanks to its integrated LED display, the device allows for immediate reading of values without the need for a computer or smartphone.



Application:

- **Environmental monitoring:** Continuous real-time monitoring of temperature, humidity, and other parameters.
- **Key sectors:** An ideal solution for industry, agriculture, construction, and smart urban infrastructure.
- **Data analytics:** Tracking trends and analyzing readings via access to the built-in web server.



Features:

- **Local interface:**
  A clear, red LED display (7-segment) that allows for direct viewing of measured values.
- **Measurement capabilities:**
  Ability to simultaneously monitor and read data from up to 2 different sensors.
- **Communication and networking:**
  - Connection flexibility: 10/100 Mbps Ethernet port or Wi-Fi connectivity.
  - Support for secure protocols: HTTP(S), MQTT(S), SNMP v2c, and TCP/UDP.
- **Management:**
  An intuitive user interface accessible via a web browser, facilitating quick device configuration.
- **Design:**
  A compact housing that is ideal for locations with limited installation space.

Technical specifications

Power Supply	PoE: 33-57 V IEEE 802.3af (opcja)	USB C: 5 V DC	10–24 V DC via a 3.5 mm detachable connector
Power Consumption	Maximum 1.5 W		
Sensor bus	3-wire cable or flat cable (when using an adapter)		Supports up to 2 sensors
	Dedicated sensors: temperature, humidity, pressure, 0–10 V analog voltage via adapter, 4–20 mA analog current via adapter, CO, CO_2, NOx		
Communication	10/100 Mbps Ethernet port, RJ45 (optional)	Wi-Fi (optional)	
Housing	Enclosure rating: IP 30		
Operating Temperature	From -10 °C to +55 °C		

Version	Ethernet	Wi-Fi	Catalog number
IQIO Sens ETH	✓	-	IQ-0002-10D4-00
IQIO Sens Wi-Fi	-	✓	IQ-0002-10CC-00

Hero Web Sensor

Hero is a versatile network sensor designed for precise monitoring of environmental conditions. With its data logging capabilities and the ability to communicate directly with other modules, Hero not only measures parameters but also actively responds to changes in them, making it a reliable component of IoT systems.



Application:

- **Precise monitoring:**
  Continuous monitoring of environmental parameters in offices, warehouses, and technical rooms.
- **System integration:**
  Easy access to data via a web interface and a wide range of communication protocols.
- **Autonomous control:**
  The device can independently send control signals to other modules (e.g., relay modules) upon detection of a violation of preset alarm thresholds.



Features:

- **Multifunction inputs:**
  Supports up to 4 sensors simultaneously (temperature, humidity) or digital inputs.
- **Local interface:**
  Built-in red LED display (7-segment) for real-time display of measured values.
- **Logic and logging:**
  - Data Logger: The data logger functionality enables data archiving, viewing graphs and exporting measurements to external systems.
  - Automation: Ability to define alarm thresholds and directly notify other devices of anomalies.
- **Communication:**
  Support for protocols: HTTP, MQTT, SNMP v2c, Modbus TCP, and SMTP (email) notifications.
- **Energy efficiency:**
  Very low power consumption, making the device economical for continuous operation.

Technical specifications

Power Supply	PoE: 33-57 V IEEE 802.3af	10–24 V DC via a 3.5 mm detachable connector	
Power Consumption	Maximum 1.5 W		
Sensors	3-wire cable or flat cable (when using an adapter)		Supports up to 4 sensors
	Dedicated sensors: temperature, humidity, digital input		
OUT1 output	Typ wyjścia: przekaźnik NO	Maximum load: 1 A at 30 V DC	Operating mode: bistable, astable, monostable
OUT2 output	Output type: transistor OC, NO	Operating mode: bistable, astable, monostable	
Communication	10 Mbps Ethernet port, RJ45		
Housing	Enclosure rating: IP30		
Operating Temperature	From -10 °C to +55 °C		

Version	Catalog number
Hero Web Sensor	NN-0001-00D3-00

Nano Temp

Nano Temp
| Nano Temperature Sensor PoE

Nano Temp is a miniature module designed for precise temperature measurement and data transmission over an Ethernet network. It is ideal for applications where space-saving and quick integration with IT monitoring or building automation systems are priorities.



Application:

Precise monitoring:
Continuous monitoring of temperature in rack cabinets, server rooms, medical refrigerators, and warehouses.

Environmental analysis:
Collection of data on conditions within monitored facilities.

Autonomous notification:
Ability to send alerts regarding exceeded alarm thresholds directly to other Inveo modules (e.g., to activate air conditioning or a fan).



Features:

Local interface (PoE version):
Equipped with a clear, red LED display (7-segment) for real-time temperature monitoring.

Measurement and sensors:
- Supports a proven temperature sensor.
- Includes a dedicated sensor with a 1 m cable.

Communication and networking:
- Supports key protocols: HTTP GET, Modbus TCP, MQTT, SNMP, and TCP/UDP.
- Management via a built-in web interface (web server).

Power and installation:
- Standard version: 10–24 V DC power supply.
- PoE version: Powered directly from the Ethernet network (Power over Ethernet).
- Minimalist design for easy installation in hard-to-reach locations.

Energy efficiency:
Very low power consumption, ensuring low operating costs.

Parametry techniczne

Power Supply	**Nano Temp**	Passive PoE 10–24 V DC, via a PoE adapter	
	Nano Temperature Sensor PoE	PoE: 33-57 V IEEE 802.3af	DC: 10–24 V (3.5 mm detachable connector)
Power Consumption	Maximum 1.5 W		
Sensors	Number of entries: 1	Input type: 1-Wire bus	Sensor type: DS18B20
	Temperature measurement range: -55 °C to +125 °C		
Communication	10 Mbps Ethernet port, RJ45		
Housing	Enclosure rating: IP 30		
Operating Temperature	From -10 °C to +55 °C		

Version	Passive PoE 10-24 V DC	PoE 802.3af	DC 10-24 V	Catalog number
Nano Temp	✓	-	-	NN-0001-2004-00
Nano Temperature Sensor PoE	-	✓	✓	NN-0001-20D4-00

Nano Analog Input

The Nano Analog Input is a compact module designed for the precise measurement of analog signals and their transmission via Ethernet or an RS485 bus. Thanks to its built-in intelligence, the device not only measures voltage or current, but also automatically converts them into physical units such as temperature, pressure, or humidity.



Application:

- **Industrial signal measurement:**
  Support for current loops (4–20 mA / 0–20 mA) and voltage standards (0–5 V / 0–10 V).
- **Remote monitoring and automation:**
  Ability to control other Inveo modules when defined values are exceeded (e.g., triggering an alarm when pressure is too high).
- **Process monitoring:**
  The ideal solution for integrating analog sensors with modern IT/BMS systems.

Features:

- **Intelligent data conversion:**
  - Ability to define the measurement range and units of measurement.
  - Function for automatically converting measured values to specified physical units (e.g., bar, %, m/s).
- **Dual communication interface:**
  - LAN: Full support via IP protocols.
  - RS485 bus: Support for the Modbus RTU standard.
- **Protocol support:**
  standards: HTTP GET, Modbus TCP, SNMP, MQTT, and TCP.
- **Management:**
  Convenient result preview and full configuration via the built-in web interface.
- **Installation:**
  Minimalist housing, ideal for integration inside machines or in small control enclosures.

Parametry techniczne

Power Supply	PoE: 33-57 V IEEE 802.3af	DC: 10–24 V via a 3.5 mm detachable connector
Power Consumption	Maximum 1.5 W	
Inputs	Software-configurable analog input	Reading from a voltage or current input
	Measurement frequency: 4 Hz	Converter resolution: 17 bits
Parameters in current input mode	Measurement range: 0–20 mA or 4–20 mA	Input impedance: 1 R
	Measurement error: <0.8%	
Parameters in voltage input mode	Measurement range: 0–5 V or 0–10 V	Input impedance: 60 k
	Maximum input voltage: 12 V	Measurement error: <0.5%
Communication	10 Mbps Ethernet port, RJ45	1-port RS485, Modbus RTU
	Evenness: None, Odd, Even, Mark, Space, 2 Stops	Transmission speed: 1,200–57,600 bps
Housing	Enclosure rating: IP 30	
Operating Temperature	From -10 °C to +55 °C	

Version	Catalog number
Nano Analog Input	NN-0001-08D1-00

inveo

Nano TC Sensor

The Nano TC Sensor is an advanced measurement module designed to support professional temperature probes: thermocouples and resistance sensors (PT100/PT1000). With support for wide temperature ranges, it is ideal for monitoring thermal processes, furnaces, and industrial installations via an IP network or RS485 bus.





Application:

- **High-temperature measurement:**
  Thermocouple support enables monitoring of processes that exceed the ranges of standard silicon sensors.
- **Industrial monitoring:**
  Use of precise PT100 and PT1000 sensors in professional heating systems.
- **Autonomous control:**
  The device can automatically send notifications of threshold exceedances to other Inveo modules, enabling an immediate response (e.g., turning off heaters).

Features:

- **Measurement versatility:**
  - Supports thermocouples and resistance temperature detectors (RTDs).
  - Selectable reference temperature source (cold junction): via an RTD sensor or a preset constant value.
- **Local interface:**
  Built-in red LED display (7-segment) for real-time temperature display from connected probes.
- **Intelligent conversion:**
  Automatic conversion of measured values to specified physical units.
- **Dual communication:**
  - LAN: Full network integration (HTTP GET, Modbus TCP, SNMP, MQTT, TCP).
  - RS485: Support for the Modbus RTU industrial standard.
- **Management:**
  Full configuration and data viewing via a built-in web page (web server).

Parametry techniczne

Power Supply	PoE: 33-57 V IEEE 802.3af	DC: 10–24 V via a 3.5 mm detachable connector
Power Consumption	Maximum 1.5 W	
Inputs	Measurement frequency: 4 Hz	Converter resolution: 17 bits
	1 input for connecting thermocouples of types: E, J, K, N, T, B, R, S	
	1 input for connecting a PT100 or PT1000 sensor to obtain a reference temperature (the reference temperature can also be set via software as a fixed value)	
Communication	10 Mbps Ethernet port, RJ45	1-port RS485, Modbus RTU
	Evenness: None, Odd, Even, Mark, Space, 2 Stops	Transmission speed: 1,200–57,600 bps
Housing	Enclosure rating: IP 30	
Operating Temperature	From -10 °C to +55 °C	

Version	Catalog number
Nano TC Sensor	NN-0001-08D4-00

Media Monitor MM04

Media Monitor is an advanced pulse concentrator designed to precisely track the consumption of electricity, water, gas, and other resources. The device enables the digitization of traditional meters and makes consumption data available directly over a LAN, while offering a unique financial conversion feature.



MQTT protocol | SNMP protocol | MODBUS TCP | 4 | 10–24 V DC

Application:

- **Energy monitoring:**
  Tracking electricity consumption by counting pulses from electricity meters.
- **Utility and resource monitoring:**
  Monitoring water or gas flow, or counting events (e.g., number of passages through an infrared barrier, number of products on a line).
- **Remote cost management:** Real-time consumption monitoring from anywhere via a LAN network.

Features:

- **Measurement inputs:**
  - 4 binary inputs with full optocoupling, ensuring safety and immunity to interference.
  - Compatible with standard control voltages of 10–24 V DC.
- **Analytical functions:**
  - Currency converter: Automatic conversion of counted pulses to the selected currency, allowing for immediate assessment of consumption costs.
  - Ability to define pulse weights for each channel individually.
- **Communication and protocols:**
  - Support for standards: HTTP GET, Modbus TCP, SNMP, and MQTT.
  - Built-in web interface for viewing meter readings and device configuration.
- **Integration:** Thanks to support for MQTT and Modbus TCP, the module works seamlessly with BMS systems and platforms such as Home Assistant or openHAB.

Technical specifications

Power Supply	Passive PoE 10-24 V DC	10–24 V DC via a 3.5 mm detachable connector	
Power Consumption	Maximum 1.5 W		
Inputs	4 optically isolated inputs	Input type: potential-free(allows direct connection of meters with an open-collector output)	Maximum input voltage: 24 V
Communication	10 Mbps Ethernet port, RJ45		
Housing	Enclosure rating: IP 30		
Operating Temperature	From -10 °C to +55 °C		

Version	Catalog number
Media Monitor MM04	WS-0020-0000-00

Sensors

inveo

WebSensor T | HT | COMBO | INPUT

A family of compact external sensors designed to work with the Daxi, IQIO, and Hero Web Sensor series control units. These modules allow for precise system expansion with additional measurement points and binary inputs



Application:

- **Environmental monitoring:** Measurement of temperature and humidity in rack cabinets, warehouses, and office spaces.
- **Input monitoring (COMBO/INPUT):** Monitoring the status of potential-free contacts (e.g., door open sensors, flood detectors, alarm buttons).
- **Integration with automation systems:** Extending the capabilities of master modules with additional physical and logical data.

Model specifications:

- **WebSensor T:** Designed exclusively for precise measurement of ambient temperature.
- **WebSensor HT:** A dual-function module that enables simultaneous measurement of temperature and relative humidity.
- **WebSensor COMBO:** The most versatile model, combining temperature and humidity measurement with status monitoring of two additional digital inputs.
- **WebSensor INPUT:** An expansion module focused on logic functions, offering status monitoring of two digital inputs (without environmental measurements).

Features:

- **Full compatibility:** Devices designed specifically for the Inveo ecosystem – instantly recognized by base modules (Daxi, IQIO, Hero).
- **Installation flexibility:** Choice of cable type and length, allowing for convenient routing of the sensor to hard-to-reach locations.
- **Small dimensions:** The compact design allows for discreet installation inside enclosures or in telecommunications cabinets.
- **System economy:** Allows for the expansion of measurement points without the need to purchase additional controllers with their own IP address.

Technical specifications

WebSensor COMBO	WebSensor HT	WebSensor T	Temperature sensor	DS18B20 mounted on a PCB
			Temperature measurement range	-55 °C ± 125 °C
			Temperature range: -10 °C to 85 °C	± 0,5 °C
			Temperature accuracy: -55 °C ± 125 °C	± 2 °C
			Humidity sensor	Humidity sensor mounted on a PCB
			Measured humidity range	0 - 100 %
			Measurement accuracy	± 3 %
		WebSensor INPUT	Input Type 1	Contact digital input - supports connection of a door-open sensor
			Input Type 2	Digital leakage input - supports connection of a flood sensor

Version	Temperature measurement	Humidity measurement	Digital Inputs Contact and Leakage	Catalog number
WebSensor T	✓	-	-	WS-0001-0004-00
WebSensor T - 3-wire sensor, 1 m	✓	-	-	WS-0001-0104-00
WebSensor T - 3-wire sensor, 5 m	✓	-	-	WS-0011-0104-00
WebSensor T - 3-wire sensor, 10 m	✓	-	-	WS-0081-0104-00
WebSensor T - RJ12 sensor, 1 m	✓	-	-	WS-0001-0404-00
WebSensor T - RJ12 sensor, 5 m	✓	-	-	WS-0011-0404-00
WebSensor T - RJ12 sensor, 10 m	✓	-	-	WS-0081-0404-00
WebSensor HT	✓	✓	-	WS-0002-0004-00
WebSensor HT - 3-wire sensor, 1 m	✓	✓	-	WS-0003-0104-00
WebSensor HT - 3-wire sensor, 5 m	✓	✓	-	WS-0012-0104-00
WebSensor HT - 3-wire sensor, 10 m	✓	✓	-	WS-0082-0104-00
WebSensor HT - RJ12 sensor, 1 m	✓	✓	-	WS-0003-0404-00
WebSensor HT - RJ12 sensor, 5 m	✓	✓	-	WS-0012-0404-00
WebSensor HT - RJ12 sensor, 10 m	✓	✓	-	WS-0082-0404-00
WebSensor Combo	✓	✓	✓	WS-0008-0004-00
WebSensor Combo - 3-wire sensor, 1 m	✓	✓	✓	WS-0009-0104-00
WebSensor Combo - 3-wire sensor, 5 m	✓	✓	✓	WS-0018-0104-00
WebSensor Combo - 3-wire sensor, 10 m	✓	✓	✓	WS-0088-0104-00
WebSensor Combo - RJ12 sensor, 1 m	✓	✓	✓	WS-0009-0404-00
WebSensor Combo - RJ12 sensor, 5 m	✓	✓	✓	WS-0018-0404-00
WebSensor Combo - RJ12 sensor, 10 m	✓	✓	✓	WS-0088-0404-00
WebSensor Combo + SZH-03 + KMS-23	✓	✓	Plus a flood sensor and a reed switch	WS-0008-8004-00
WebSensor Combo - 3-wire sensor, 1 m + SZH-03 + KMS-23	✓	✓	Plus a flood sensor and a reed switch	WS-0009-8104-00
WebSensor Combo - 3-wire sensor, 5 m + SZH-03 + KMS-23	✓	✓	Plus a flood sensor and a reed switch	WS-0018-8104-00
WebSensor Combo - 3-wire sensor, 10 m + SZH-03 + KMS-23	✓	✓	Plus a flood sensor and a reed switch	WS-0088-8104-00
WebSensor Combo - RJ12 sensor, 1 m + SZH-03 + KMS-23	✓	✓	Plus a flood sensor and a reed switch	WS-0009-8404-00
WebSensor Combo - RJ12 sensor, 5 m + SZH-03 + KMS-23	✓	✓	Plus a flood sensor and a reed switch	WS-0018-8404-00
WebSensor Combo - RJ12 sensor, 10 m + SZH-03 + KMS-23	✓	✓	Plus a flood sensor and a reed switch	WS-0088-8404-00

Version	Temperature measurement	Humidity measurement	Digital Inputs Contact and Leakage	Catalog number
WebSensor Input	-	-	✓	WS-0002-0001-00
WebSensor WebSensor Input - 3-wire sensor, 1 m	-	-	✓	WS-0002-0101-00
WebSensor WebSensor Input - 3-wire sensor, 5 m	-	-	✓	WS-0012-0101-00
WebSensor WebSensor Input - 3-wire sensor, 10 m	-	-	✓	WS-0082-0101-00
WebSensor WebSensor Input - RJ12 sensor, 1 m	-	-	✓	WS-0002-0401-00
WebSensor WebSensor Input - RJ12 sensor, 5 m	-	-	✓	WS-0012-0401-00
WebSensor WebSensor Input - RJ12 sensor, 10 m	-	-	✓	WS-0082-0401-00

inveo

DS Temperature Sensor

A precision digital temperature sensor housed in a protective stainless steel sleeve.Thanks to its design, it ensures high measurement accuracy and excellent thermal conductivity, making it a reliable component in environmental monitoring systems.



Application:

- **Precise temperature measurement:**
  Ideal for monitoring air across a wide temperature range.
- **Monitoring systems:**
  Direct integration with modules from the Nano Temp, Hero, WebSensor, Virtus, Daxi, and IQIO series.

Features:

- **High sensitivity:** Very low thermal inertia allows for an instantaneous response to changes in ambient temperature.
- **Robust construction:** The DS18B20 sensor is enclosed in a durable stainless steel housing.
- **1-Wire interface:** Allows for easy connection of multiple sensors on a single communication line.
- **Flexibility:** Available with various cable types and lengths (1 m standard), making it easy to adapt to specific installation requirements.

Technical specifications

Temperature measurement range	-55 °C - +125 °C	
Intended use	**2-wire cable**	Nano Temp Nano Temperature Sensor PoE
	3-wire cable	IQIO Pro IQIO Sens Hero Web Sensor Virtus
	RJ12 cable	Daxi IQIO PRO (using an RJ12 adapter) IQIO Sens (using an RJ12 adapter) Hero Web Sensor (using an RJ12 adapter) Virtus
Cable length	1 m 5 m 10 m	

Version	Cable length	Catalog number
DS1 2-wire temperature sensor	1 m	DS-0001-0200-00
DS1 3-wire temperature sensor	1 m	DS-0001-0100-00
DS1 RJ12 temperature sensor	1 m	DS-0001-0400-00
DS5 2-wire temperature sensor	5 m	DS-0010-0200-00
DS5 3-wire temperature sensor	5 m	DS-0010-0100-00
DS5 RJ12 temperature sensor	5 m	DS-0010-0400-00
DS10 2-wire temperature sensor	10 m	DS-0080-0200-00
DS10 3-wire temperature sensor	10 m	DS-0080-0100-00
DS10 RJ12 temperature sensor	10 m	DS-0080-0400-00

inveo

WebSensor CO_2HT

The WebSensor CO2HT is a specialized "3-in-1" measurement module designed for precise monitoring of atmospheric composition. By integrating three key parameters, it serves as the foundation for forced ventilation and early warning systems in facilities at high risk of gas accumulation.



Application:

- **Technical and industrial facilities:** Machine rooms, generator rooms, and server rooms.
- **Underground infrastructure:** Multi-space garages, tunnels, and protective structures where gas concentration monitoring is critical.
- **Monitoring of unmanned facilities:** Environmental monitoring of rarely visited buildings and warehouses.
- **Occupational Safety and Health:** Air quality control to ensure optimal working and living conditions.

Features:

- **Triple measurement:**
  Simultaneous monitoring of carbon dioxide (CO2) concentration, temperature, and relative humidity.
- **High precision:**
  Utilization of advanced sensing cells that ensure data reliability in harsh conditions.
- **Inveo ecosystem:**
  Full compatibility with master units (Daxi, IQIO, Virtus), enabling the creation of distributed measurement networks.
- **Installation flexibility:**
  Choice of cable type (flat/round) and length (1 m standard), facilitating installation in ventilation ducts or on walls.
- **Measurement parameters:**
  - CO2: Measurement of carbon dioxide concentration in the air.
  - Temperature: Precise reading of thermal conditions.
  - Humidity: Monitoring of water vapor levels in the atmosphere.

Technical specifications

Measuring element used	SCD30		
Parameter	**CO_2 concentration**	**Humidity**	**Temperature**
Measuring range	400-10 000 ppm	0-100 % RH	From -40 °C to 70 °C
Measurement accuracy	± (30 ppm+3 %)	± 3 % RH @ 25 °C	± (0,4 °C+0,023*(T-25 °C))
Measurement repeatability	± 10 ppm	± 0,1 % RH	± 0,1 °C
Communication	1 RJ12 connector, 1 screw-type data bus connector		

Version	Catalog number
WebSensor CO_2	WS-0000-2000-00
WebSensor CO_2 - 3-wire sensor, 1 m	WS-0000-2100-00
WebSensor CO_2 - 3-wire sensor, 5 m	WS-0010-2100-00
WebSensor CO_2 - 3-wire sensor, 10 m	WS-0080-2100-00
WebSensor CO_2 - RJ12 sensor, 1 m	WS-0000-2400-00
WebSensor CO_2 - RJ12 sensor, 5 m	WS-0010-2400-00
WebSensor CO_2 - RJ12 sensor, 10 m	WS-0080-2400-00

WebSensor CO

The WebSensor CO is a measurement module designed to detect carbon monoxide (CO) in the air. As a safety-critical device, it enables early detection of this odorless and highly toxic gas, allowing for the immediate activation of alarm or ventilation systems via Inveo master modules.



Application:

Infrastructure safety:
Underground garages, tunnels, and protective structures where there is a risk of exhaust fumes accumulating.

Technical facilities:
Machine rooms and generator rooms.

Monitoring of unattended facilities:
Continuous environmental monitoring of rarely visited buildings and warehouses.

Health and safety:
Early warning in occupational safety and building automation systems.

Features:

Precise CO Detection: Measures carbon monoxide concentrations in the air with high sensitivity.

Ecosystem Integration: Fully integrates with Daxi, IQIO, and Virtus units.

Discreet Installation: The compact housing allows for installation in spaces with limited room.

Configuration: Choice of cable type (flat or round) and length (1 m standard), facilitating optimal sensor placement relative to potential gas emission sources.

Measurement parameters:
- Medium: Carbon monoxide (CO).
- Application: Air quality and safety monitoring in enclosed spaces.

Technical specifications

The measuring element used	ZE3-CO
Measurement range	0-1000 ppm
Measurement accuracy	± 1 ppm
Communication	1 RJ12 connector, 1 screw-type data bus connector

Version	Catalog number
WebSensor CO	WS-0000-1000-00
WebSensor CO - 3-wire sensor, 1 m	WS-0000-1100-00
WebSensor CO - 3-wire sensor, 5 m	WS-0010-1100-00
WebSensor CO - 3-wire sensor, 10 m	WS-0080-1100-00
WebSensor CO - RJ12 sensor, 1 m	WS-0000-1400-00
WebSensor CO - RJ12 sensor, 5 m	WS-0010-1400-00
WebSensor CO - RJ12 sensor, 10 m	WS-0080-1400-00

WebSensor 1 Phase

WebSensor 1 Phase is a detection module designed to monitor the presence of AC voltage in a single-phase power grid. The device enables the immediate detection of power outages, which is essential for maintaining the continuous operation of server rooms, cooling systems, and production processes.



Application:

- **Power System Monitoring:** Continuous monitoring of grid stability and proper power distribution.
- **Fault Detection:** Immediate detection of loss and restoration of 230 V mains voltage.
- **Industrial Monitoring:** Monitoring the operating status of single-phase machines and equipment.
- **Smart Homes:** Integration with building management systems to automate emergency scenarios.

Features:

- **Integration with the Inveo ecosystem:**
  Full compatibility with master modules (e.g., Hero, IQIO, Daxi), enabling the sending of email/SMS notifications regarding power outages.
- **Safety:**
  Galvanic isolation ensuring a safe connection between the network and the controller.
- **Installation flexibility:**
  Choice of connection cable type and length (1 m standard), facilitating installation in electrical panels.
- **Reliability:**
  Simple and robust design engineered for continuous operation in professional automation systems.
- **Measurement parameters:**
  - Input voltage: 230 V AC.
  - Detection type: Binary (voltage present/absent).

Technical specifications

Communication	2 RJ12 connectors, 1 detachable data bus connector
Signaling	LED indicator showing that power is present

Version	Catalog number
WebSensor 1 Phase	WS-0000-0020-00
WebSensor 1 Phase - 3-wire sensor, 1 m	WS-0000-0120-00
WebSensor 1 Phase - 3-wire sensor, 5 m	WS-0010-0120-00
WebSensor 1 Phase - 3-wire sensor, 10 m	WS-0080-0120-00
WebSensor 1 Phase - RJ12 sensor, 1 m	WS-0000-0420-00
WebSensor 1 Phase - RJ12 sensor, 5 m	WS-0010-0420-00
WebSensor 1 Phase - RJ12 sensor, 10 m	WS-0080-0420-00

1 Phase Detector

The 1-phase detector is an advanced module designed to monitor the presence of 230V AC voltage in single-phase networks. Thanks to its modular housing, the device integrates seamlessly with standard electrical equipment, serving as a reliable component in power monitoring systems and industrial automation.



Application:

- **Professional power supervision:** Continuous monitoring of power distribution systems directly at switchgear panels.
- **Grid status detection:** Instant notification of 230 V mains power outages and restoration.
- **Building and industrial automation:** Monitoring of machine operation and integration with smart building solutions (Smart Building).
- **Inveo ecosystem:** Full integration with Inveo automation systems, enabling the creation of complex scenarios dependent on the power supply status.

Features:

- **DIN rail mounting:**
  A standardized housing that enables quick and neat installation in control cabinets and switchgear.
- **Industrial reliability:**
  A design suited for continuous operation in the demanding conditions of machine monitoring.
- **Safety:**
  Effective isolation of the high-voltage signal from the controllers' logic circuits.
- **Customization:**
  Choice of cable type (flat/round) and length (1 m standard), allowing for optimal connection to the master module.
- **Technical specifications:**
  - Monitored voltage: 230 V AC.
  - Housing type: Modular, for DIN rail.
  - Compatibility: All Inveo master modules equipped with sensor inputs.

Technical specifications

Communication	1 RJ12 connector, 1 detachable data bus connector
Signaling	LED indicator showing that power is present

Version	Catalog number
1 Phase Detector	OT-0000-0001-00
1 Phase Detector - 3-wire sensor, 1 m	OT-0000-0101-00
1 Phase Detector - 3-wire sensor, 5 m	OT-0010-0101-00
1 Phase Detector - 3-wire sensor, 10 m	OT-0080-0101-00
1 Phase Detector - RJ12 sensor, 1 m	OT-0000-0401-00
1 Phase Detector - RJ12 sensor, 5 m	OT-0010-0401-00
1 Phase Detector - RJ12 sensor, 10 m	OT-0080-0401-00

3 Phase Detector

The 3-Phase Detector is a specialized module designed for comprehensive monitoring of three-phase power systems. The device not only detects the presence of individual phases but also verifies their correct sequence, which is essential for the safe operation of rotating equipment such as pumps, fans, and compressors.



Application:

- **Power System Monitoring:** Continuous monitoring of the presence of all three phases and the correctness of their distribution.
- **Machine Protection:** Detection of phase loss or restoration and control of phase sequence to prevent motor damage.
- **Industrial monitoring:** Supervision of three-phase powered equipment in production facilities and machine rooms.
- **Smart buildings:** Integration with BMS systems to automatically switch to emergency power or notify of grid faults.

Features:

- **Full network diagnostics:** Simultaneous detection of phase loss/restoration for all three phases and phase sequence monitoring.
- **DIN rail mounting:** Standardized modular housing for professional installation in control cabinets.
- **Inveo Ecosystem:** Full integration with Inveo automation systems, enabling remote network status monitoring via LAN.
- **Configuration:** Choice of cable type (flat/round) and length (1 m standard) for convenient connection to the master module.
- **Technical specifications:**
  - Monitored voltage: Three-phase network (3x400 V AC).
  - Logical functions: Phase loss detection, phase sequence detection.
  - Housing: Designed for DIN rail mounting.

Technical specifications

Communication	1 RJ12 connector, 1 detachable data bus connector
Signaling	LED indicators showing the presence of voltage in each phase
	LED indicator showing the presence of all phases
	LED indicator showing the correct phase sequence

Wersja	Numer katalogowy
3 Phase Detector	OT-0000-0002-00
3 Phase Detector - 3-wire sensor, 1 m	OT-0000-0102-00
3 Phase Detector - 3-wire sensor, 5 m	OT-0010-0102-00
3 Phase Detector - 3-wire sensor, 10 m	OT-0080-0102-00
3 Phase Detector - RJ12 sensor, 1 m	OT-0000-0402-00
3 Phase Detector - RJ12 sensor, 5 m	OT-0010-0402-00
3 Phase Detector - RJ12 sensor, 10 m	OT-0080-0402-00

inveo

WebSensor U | I

The WebSensor U/I series consists of measurement modules designed to integrate professional industrial sensors with Inveo master modules. These modules make it possible to feed data into the system from any device equipped with a standard analog output (voltage or current).



Application:

- **Industrial Sensor Readout:**
  Integration of a wide range of sensors (pressure, flow, liquid level, force, and others) equipped with standard control outputs.
- **WebSensor U:**
  Designed for sensors with a 0-10 V voltage output.
- **WebSensor I:**
  Designed for sensors with a 4-20 mA current output.
- **Sensor power supply:**
  Ability to directly power the connected sensor without the need for external power supplies.

Features:

- **Built-in power supply:**
  The modules provide a 12 V DC output (max. 50 mA) dedicated to powering the sensor they work with.Integration with the Inveo ecosystem: Full compatibility with master units (e.g., Virtus, IQIO, Daxi) that read processed values over a LAN.
- **Compact design:**
  Small dimensions facilitate installation near the sensor or inside control cabinets.
- **Customizable connection:**
  Choice of cable type and length (1 m standard) for easy adaptation to installation conditions.
- **Technical specifications:**
  - Power output: 12 V DC, current up to 50 mA.
  - Input standard (Model U): Voltage 0-10 V.
  - Input standard (Model I): Current 4-20 mA.

Technical specifications

Version	Voltage measurement range	Input impedance	Sensor resolution	Communication
WebSensor U	0-10 V	57 kΩ	12 bit	2 RJ12 connectors, 1 detachable data bus connector

Version	Current measurement range	Maximum voltage	Maximum current	Input impedance	Sensor resolution	Backbone
WebSensor I	4-20 mA	26 V	25 mA	2 Ω	12 bit	2 RJ12 connectors, 1 detachable data bus connector

Version	Catalog number
WebSensor U	WS-0000-0040-00
WebSensor U - 3-wire sensor, 1 m	WS-0000-0140-00
WebSensor U - 3-wire sensor, 5 m	WS-0010-0140-00
WebSensor U - 3-wire sensor, 10 m	WS-0080-0140-00
WebSensor U - RJ12 sensor, 1 m	WS-0000-0440-00
WebSensor U - RJ12 sensor, 5 m	WS-0010-0440-00
WebSensor U - RJ12 sensor, 10 m	WS-0080-0440-00
WebSensor I	WS-0000-4000-00
WebSensor I - 3-wire sensor, 1 m	WS-0000-4100-00
WebSensor I - 3-wire sensor, 5 m	WS-0010-4100-00
WebSensor I - 3-wire sensor, 10 m	WS-0080-4100-00
WebSensor I - RJ12 sensor, 1 m	WS-0000-4400-00
WebSensor I - RJ12 sensor, 5 m	WS-0010-4400-00
WebSensor I - RJ12 sensor, 10 m	WS-0080-4400-00

WebSensor RTD

The WebSensor RTD is an advanced temperature transducer designed to work with resistance temperature detectors (RTDs). The device enables precise data reading from PT100 and PT1000 probes, converting it into a digital signal compatible with the Inveo ecosystem. Thanks to support for various connection methods, the module guarantees high measurement accuracy even with long measurement cables.



Application:

- **Precise temperature monitoring:** Ideal for applications in laboratories, the pharmaceutical industry, and the food industry.
- **Industrial process monitoring:** Monitoring the temperature of machines, tanks, and heating and cooling systems.
- **Integration with Inveo automation:** Extends the capabilities of master modules (Hero, IQIO, Daxi, Virtus) with professional resistance measurements via LAN.

Features:

- **Versatility (PT100/PT1000):** A built-in switch allows for instant switching between supported sensor types (PT100 or PT1000) without having to replace the device.
- **Support for advanced connections**: Support for two-wire and four-wire sensors.
  The four-wire connection eliminates errors caused by the resistance of long measurement cables.
- **Industrial-grade accuracy:** High measurement stability, critical in processes requiring strict adherence to temperature regimes.
- **Customization:** Choice of cable type and length (1 m standard), facilitating optimal placement of the module relative to the sensor and the master unit.
- **Technical specifications:**
  - Supported sensors: PT100, PT1000.
  - Connection types: 2-wire, 4-wire.
  - Compatibility: All Inveo master modules with sensor inputs (Daxi, IQIO, Hero, Virtus).

Technical specifications

Communication	2 RJ12 connectors, 1 detachable data bus connector

Version	Catalog number
WebSensor RTD	WS-0000-0800-00
WebSensor RTD - 3-wire sensor, 1 m	WS-0000-0900-00
WebSensor RTD - 3-wire sensor, 5 m	WS-0010-0900-00
WebSensor RTD - 3-wire sensor, 10 m	WS-0080-0900-00
WebSensor RTD - RJ12 sensor, 1 m	WS-0000-0C00-00
WebSensor RTD - RJ12 sensor, 5 m	WS-0010-0C00-00
WebSensor RTD - RJ12 sensor, 10 m	WS-0080-0C00-00

Bus Expander

The Bus Expander is a passive signal splitter designed to simplify the setup of measurement networks within the Inveo ecosystem. The device enables the organized and rapid connection of multiple environmental sensors to a single bus port



Application:

- **Expansion of measurement points:**
  Enables easy connection of multiple sensors to individual inputs on devices such as IQIO, Hero Web Sensor, Daxi, or Virtus.
- **Cabling optimization:**
  Allows for the efficient use of existing cabling infrastructure to connect distributed sensors.
- **System scalability:**
  An ideal solution in situations where the basic number of ports on the controller proves insufficient for the monitored facility.

Features:

- **Simple installation (Plug & Play):** Connect the module directly to the selected host device, then plug the required sensors into it.
- **Clear layout**: Helps keep control cabinets and enclosures tidy by eliminating the need for cumbersome soldering or wire splicing.
- **Versatility:** Works with the entire range of Inveo environmental sensors, ensuring stable data transmission from each one.
- **Installation advantage:** Thanks to the use of the Bus Expander, expanding the system with new sensors (e.g., additional WebSensors T or CO2) does not require replacing the main module with a larger model, which significantly reduces investment costs.

Technical specifications

Intended use	Daxi, Virtus
	IQIO Pro
	IQIO Sens
	Hero Web Sensor
RJ12 connectors	4
Three-way disconnectable connector	4

Version	Catalog number
Bus Expander 1-Wire	OT-0001-0000-00

Example of use

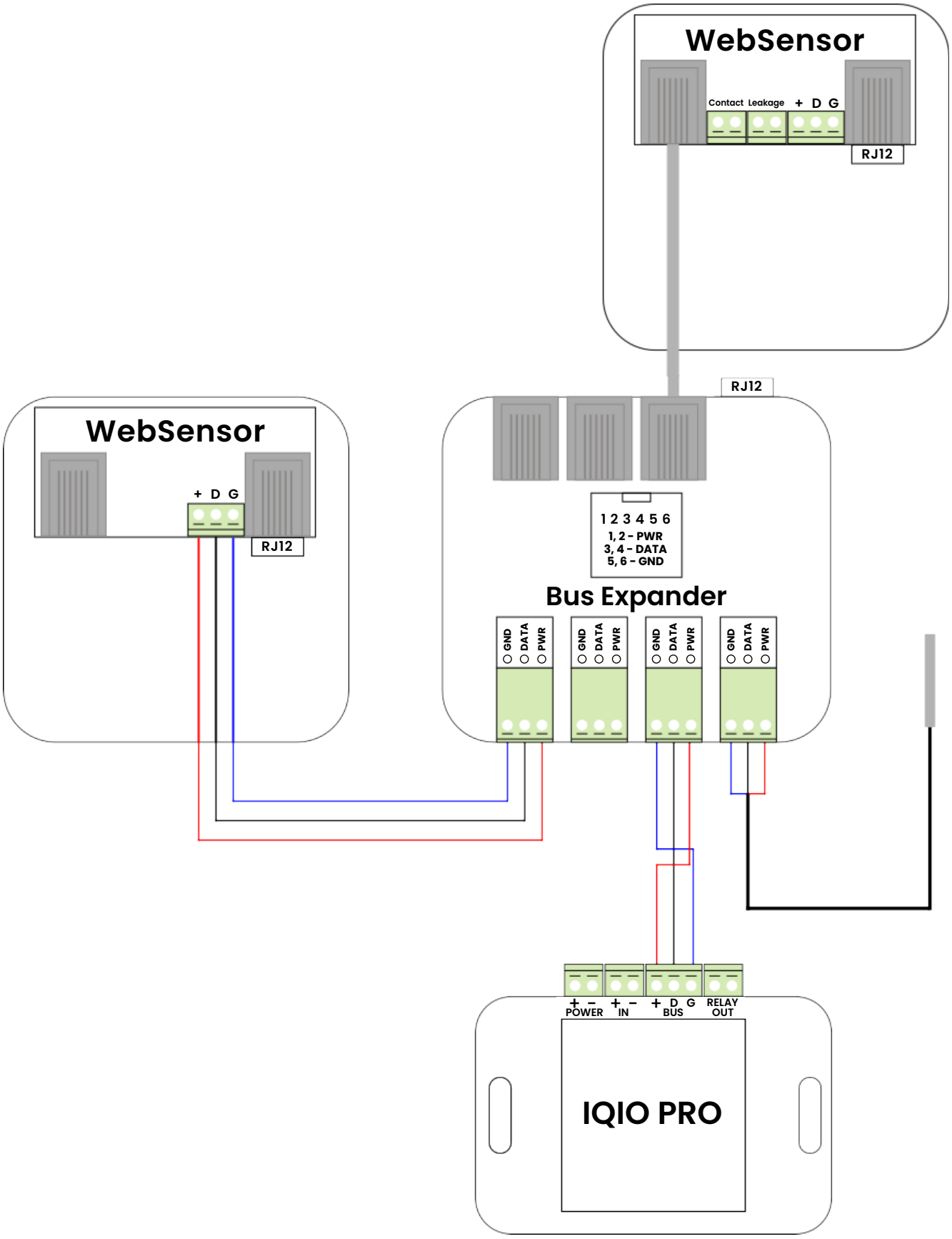

Time control

IQIO Pro

IQIO PRO is an advanced monitoring module designed to simultaneously monitor multiple physical parameters. The device combines the functions of a network sensor, a data logger, and an automation controller, offering full control over the operating environment of machines and facilities.



Application:

- **Comprehensive monitoring:** Continuous monitoring of environmental parameters in industry, agriculture, construction, and urban infrastructure.
- **Remote management:** Real-time data tracking and analysis with access via a built-in web interface.
- **Maintenance:** Monitoring of operating conditions for critical components of industrial systems.



Features:

- **Support for up to 6 sensors:** Ability to connect and simultaneously monitor up to six different physical parameters (e.g., temperature, humidity).
- **Automation and alarm thresholds:**
  Configurable actions that allow the device to automatically respond to specific events (e.g., temperature exceeding a threshold).
- **Communication and protocols:**
  - Support for secure standards: HTTP(S), MQTT(S), SNMP v2c/v3, Modbus TCP, and TCP/UDP.
  - Real-time time synchronization via the SNTP protocol.
  - Hybrid connectivity: Ethernet or Wi-Fi only for the IQIO PRO Wi-Fi version.
- **Logging and analytics:**
  - Built-in memory for local logging of readings.
  - Visualization of data history in the form of easy-to-read graphs directly in the browser.
- **Notifications:**
  Alarm system sending email and SMS messages immediately upon detecting anomalies.

  Configurable I/O: Flexible setting of input and output parameters, including response type and relay activation times.

Technical specifications

Power SupplyPower Supply	PoE: 33-57 V IEEE 802.3af (optional)	USB C: 5 V DC	10–24 V DC via a 3.5 mm detachable connector
Power Consumption	Maximum 1.5 W		
Sensor bus	3-wire cable or flat cable (when using an adapter)		Supports up to 6 sensors
	Dedicated sensors: temperature, humidity, pressure, 0–10 V analog voltage via adapter, 4–20 mA analog current via adapter, CO, CO_2, NOx		
Inputs	Number of digital inputs: 1	Input type: pre-polarized NO (normally open) (See Figure 2 on page 7)	
Outputs	1 potential-free NO relay output		Maximum operating voltage: 30 V DC
	Operating modes: bistable, astable, monostable, timer		
	Maximum channel current: 1 A		
Communication	Wi-Fi	10/100 Mbps Ethernet port, RJ45 (optional)	
Housing	Enclosure rating: IP 30	Dimensions (L/W/H): 50.1 x 74.6 x 27 mm	
Operating Temperature	From -10 °C to +55 °C		

Version	Ethernet	Wi-Fi	Catalog number
IQIO PRO Wi-Fi	-	✓	IQ-0021-10CF-00
IQIO PRO Wi-Fi ETH	✓	✓	IQ-0021-10DF-00

IQIO IO

A universal I/O module designed for remote monitoring and control via LAN or Wi-Fi. With its integrated LED display and support for multiple communication protocols, it is the ideal tool for quick integration with modern IoT systems.



Application:

- **Remote control and monitoring:** Monitoring the status of digital inputs and controlling relays over an IP network.
- **System integration:** Compatibility with BMS, alarm, and monitoring systems (system scalability).
- **Network monitoring:** ICMP Watchdog function for automatically verifying the availability of devices on the network.



Features:

- **Local interface:**
  Built-in, easy-to-read LED display (7-segment, red)
  for real-time display of device status or values.
- **Communication and configuration:**
- - Supported protocols: HTTP(S), MQTT(S), Modbus TCP, SNMP v2c/v3, and TCP/UDP.
  - Intuitive management via a built-in web server (browser).
  - Connectivity options: Ethernet (RJ45) or Wi-Fi.
- **Logic and alarms:**
  - Full configurability of input/output parameters (activation time, response type).
  - Alarm notifications sent via email and SMS (SMSAPI).
- **Design:**
  Compact housing enabling installation
  in confined spaces within control cabinets and telecommunications enclosures.

Technical specifications

Power Supply	PoE: 33-57 V IEEE 802.3af (IQIO IO ETH)	USB C: 5 V DC	10–24 V DC via a 3.5 mm detachable connector
Power Consumption	Maximum 1.5 W		
Inputs	Number of digital inputs: 1	Input type: pre-polarized (short-circuit) (See Figure 2 on page 7)	
Outputs	1 potential-free NO relay output	Maximum operating voltage: 30 V DC	
	Operating modes: bistable, astable, monostable, timer		
	Maximum channel current: 1 A		
Communication	10/100 Mbps Ethernet port, RJ45 (IQIO IO ETH)	Wi-Fi (IQIO IO Wi-Fi)	
Housing	Enclosure rating: IP 30	Dimensions (L/W/H): 50.1 x 74.6 x 27 mm	
Operating Temperature	From -10 °C to +55 °C		

Version	Ethernet	Wi-Fi	Catalog number
IQIO IO ETH	✓	-	IQ-0001-10D3-00
IQIO IO Wi-Fi	-	✓	IQ-0001-10CB-00

Daxi

Daxi is a versatile network controller that integrates advanced measurement, control, and communication functions. With its modern web interface and support for Lua scripts, the device serves as a central component in building automation, industrial automation, and IT monitoring systems.



Application:

- **Smart Building:** Control of lighting, blinds, heating, and ventilation (HVAC).
- **IT Infrastructure:** Monitoring of server rooms, telecommunications cabinets, and environmental parameters.
- **Industry:** Control of automation processes and monitoring of machine operation.
- **Network Diagnostics:** Monitoring of network devices using the ICMP protocol (Watchdog).



Features:

- **Advanced inputs and sensors:**
  - Support for multiple sensors: temperature, humidity, pressure, and gas detection.
  - Support for analog signals (current and voltage).
  - Multifunction inputs: click detection, pulse counting, and frequency measurement.
- **Automation and logic:**
  - Intuitive graphical interface for setting conditions and trigger thresholds (e.g., activating ventilation at a specified humidity threshold).
  - Extensive schedule for timed actions and built-in astronomical clock (control based on sunrise/sunset).
  - For advanced users: full programming freedom in the Lua scripting language.
- **Flexible relay outputs:** Operation in modes: standard (on/off), astable, timed, and group (dedicated to blinds and curtains).
- **Communication and integration:**
  - Modbus Agent (mbAgent): Retrieving, mapping, and transmitting data from external Modbus devices.
  - Protocols: HTTP(S), MQTT(S), Modbus TCP, SNMP v2c/v3, KNX, TCP/UDP, Syslog, and Email.
  - Ecosystem: iCluster integration (Inveo devices), compatibility with cloud systems and easy transfer of I/O statuses between devices.

  Logging and notifications: Built-in data logger with graphing and export functions, plus email and SMS messaging (via SMSAPI).
- **Design:** Built-in 2-port network switch, modern web interface, optional Wi-Fi, and 230 V AC power supply.

Technical specifications

Power Supply	PoE: 33-57 V IEEE 802.3af	230 V AC (optional)	10–24 V DC via a 3.5 mm detachable connector
Power Consumption	1.2 W – 3.5 W, depending on the number of outputs activated		
Sensor bus	2 RJ12 jacks	Supports up to 16 sensors	
	Dedicated sensors: temperature, humidity, pressure, 0–10 V analog voltage via adapter, 4–20 mA analog current via adapter, CO, CO_2, NOx gas		
Inputs	Number of digital inputs: 8	Input voltage: 10–24 V	
	Input type: pre-polarized (normally open) / voltage (10–24 V DC) (See Figure 1 on page 7)		
Outputs	8 potential-free NO relay outputs	Maximum operating voltage: 230 V AC	
	Operating modes: bistable, astable, monostable, roller shutter, timer		
	Maximum channel current: 2 A		
Communication	2 10/100 Mbps Ethernet ports, RJ45	Wi-Fi (optional)	
Housing	Enclosure rating: IP 30	Dimensions (L/W/H): 90 x 107 x 65.2 mm	
Operating Temperature	From -10 °C to +55 °C		

Version	Power supply 230 V AC	Wi-Fi	Catalog number
Daxi LED	-	-	DX-0140-0057-00
Daxi LED 230 V	✓	-	DX-0140-0077-00
Daxi LED Wi-Fi	-	✓	DX-0140-005F-00
Daxi LED Wi-Fi 230 V	✓	✓	DX-0140-007F-00

Cronos
Timer

Network-based real-time controller with an astronomical clock function. The device enables precise management of electrical circuits based on calendar schedules and the sun's position, combining the functions of a traditional timer with modern IP communication.





Application:

- **Astronomical schedules:**
  Automatically turn on lights or devices
  at sunrise and sunset (calculated based on geographic coordinates).
- **Building automation:**
  Control of HVAC systems, irrigation, and Smart Home infrastructure
  according to a precise schedule.
- **Remote control:**
  Direct management of outputs via a web interface or network commands.

Features:

- **Powerful integration:**
  Support for industrial and building standards: HTTP GET, SNMP,
  TCP/UDP, and KNX IP (routing mode).
- **Local interface:**
  An LCD display and buttons allow you to view the operating status
  and configure the network without using a computer.
- **Flexible configuration:**
  Parameters can be set via the built-in web interface, keyboard,
  or by loading a file from a USB drive.
- **Time independence:**
  A built-in real-time clock with battery backup
  ensures the continuity of schedules after a power outage.

Technical specifications

Power Supply	230 V AC	
Power Consumption	5 W	
Inputs	8 potential-free NO relay outputs	Maximum operating voltage: 250 V AC
	Operating mode: bistable, astable, monostable	Maximum current rating: 8 A
Communication	10/100 Mbps Ethernet port, RJ45	
Housing	Enclosure rating: IP 30	Dimensions (L/W/H): 90 x 104.8 x 60 mm
Operating Temperature	From -10 °C to +55 °C	

Version	Catalog number
Cronos	OT-0002-0000-00

Other devices

Media Converter

It is a smart "translator" that connects industrial devices to a computer network, providing remote access to them via the Internet. By using two devices in tandem, you can transmit an RS485 signal over long distances using existing network cables, instead of laying hundreds of meters of new wiring.



Application:

- **System integration:**
  Replacing the RS-485 protocol with LAN in industrial automation, access control, and environmental monitoring systems.
- **Virtual serial port:**
  Ability to remotely access devices (e.g., energy meters, PLCs) from anywhere on the network as if they were connected directly to a computer.
- **Distributed systems:**
  Connecting remote RS-485 bus segments via existing LAN/Internet network infrastructure.

Features:

- **Versatile operating modes:** The device supports a wide range of network protocols, allowing it to adapt to any IT architecture:
  - TCP: Client and Server (ensures error-free data transmission),
  - UDP: Client, Server, and UDP Multicast (fast transmission to multiple recipients simultaneously).
- **Remote management:** Full configuration of transmission parameters (speed, data bits, parity) and network settings is performed via an intuitive web interface.
- **Protocol transparency:** The converter transmits data transparently, which means compatibility with almost any RS-485-based protocol (e.g., Modbus RTU).
- **Reliability:** Compact housing and stable continuous operation, designed for professional industrial installations.

Technical specifications

Power Supply	10–24 V DC via a 3.5 mm screw terminal	
Power Consumption	2 W	
Communication	10 Mbps Ethernet port, RJ45	RS-485 port
Housing	Enclosure rating: IP30	Dimensions: 90 x 52.5 x 65 mm
Operating Temperature	From -10 °C to +55 °C	

Version	Catalog number
Media Converter	OT-0008-0000-00

Emulator pendrive

The device functions as a virtual USB storage device, enabling dynamic control and remote content updates over a LAN. It is an ideal solution in situations where physical access to a USB port is difficult or requires frequent data updates.



Application:

- **Presentations and Digital Signage:**
  Remote uploading of graphics to TVs mounted at heights or in storefronts. In SLIDESHOW mode, the TV automatically displays content without the need for a computer. NOTE! The device does not support video playback.
- **Industry and CNC:**
  Remote transfer of programs and software to machine tools and machines equipped with a USB port, eliminating the need to manually transfer files using a physical USB drive.
- **Content Management:**
  Ability to update data from any location via the Internet or a local network (e.g., from the store's back office).

Features:

- **Remote Access (FTP):** Built-in FTP server supporting both passive and active modes. Allows you to read and write data to the device just as you would on a network drive.
- **Capacity and Standards:** 8 GB of storage, supporting the FAT16 and FAT32 file systems.
- **Network integration:** A 10/100 Mbps Ethernet port ensures stable communication within a LAN infrastructure.Easy installation (Plug & Play): The device is powered directly from the USB port (5 V DC), requiring no additional power supplies in most applications.
- **Maintenance-free operation:** Automatic content refresh for the host device after new files are uploaded over the network.

Technical specifications

Power Supply	5 V DC from the master device	
Power Consumption	0,75 W	
Memory	Memory capacity: 8 GB	Supported file formats: FAT16, FAT23
Read speed	3,2 Mbit/s	
Write speed	1,1 Mbit/s	
Communication	10/100 Mbps Ethernet port, RJ45	
Housing	Enclosure rating: IP30	Dimensions: 145 x 94 x 34 mm
Operating Temperature	From -10 °C to +55 °C	

Version	Catalog number
Emulator Pendrive	OT-0004-0000-00

Accessories

Flood sensor

A precision contact sensor designed to detect the presence of conductive liquids. The probe is an ideal solution for early warning systems for hydraulic failures and flooding.



Applications and features:

- **Areas:**
  Monitoring of rooms at risk of flooding, such as basements, boiler rooms, pump stations, server rooms, and bathrooms.
- **Compatibility:**
  Dedicated functionality extension for WebSensor COMBO/INPUT controllers and any modules equipped with contact-type digital inputs (DI).
- **Function:**
  Enables immediate leak detection and triggers an alarm or shuts off the water valve via the control module.
- **Cable length:**
  3 m (allows for flexible installation of the probe at the lowest point in the room while maintaining a safe distance between the controller and moisture).
- **Principle of operation:**
  Utilizes the phenomenon of liquid conductance (electrical conductivity). The presence of water between the probe's electrodes causes a state change at the digital input of the master device.
- **Installation:**
  The flat design facilitates stable placement of the probe directly on the floor (e.g., tiles, concrete).
- **Durability:**
  Corrosion-resistant electrodes, ensuring a long service life even in humid environments.

Parametry techniczne

Version	Catalog number
Flood sensor	OT-0004-8000-00

Reed switch

A reliable proximity sensor designed to monitor the open status of doors, windows, gates, and service hatches. Thanks to its non-contact operation, it offers exceptional durability and resistance to mechanical wear.



Applications and features:

- **Applications:**
  Detection of the opening of entrance doors, windows, gates, and control and telecommunications cabinets (RACK).
- **Compatibility:**
  Dedicated functionality extension for WebSensor Combo/Input controllers and modules equipped with digital inputs (DI).
- **Function:**
  Monitoring access to rooms or the interior of control cabinets, enabling the triggering of an alarm or notification upon opening.
- **Electrical parameters:**
  The maximum switching current is 500 mA (ensures safe operation with logic inputs and small relays).
- **Cable length:**
  approx. 35 cm (standard length allowing for convenient signal routing from the door frame to a junction box or controller).
- **Operating principle:**
  The magnetic sensor (reed switch) changes the contact state when a dedicated magnet (included) approaches or moves away.
- **Durability:**
  The hermetic housing protects the contacts from dust, moisture, and oxidation, ensuring reliability even in harsh environmental conditions.

Technical specifications

Version	Catalog number
Reed switch	OT-0004-0000-00

www.inveo.com.pl

Inveo Sp. z o.o.
Ul. Rzemieślnicza 21, 43-340 Kozy
Tel. +48 33 444 65 87 | Kom. +48 785 552 252
E-mail: info@inveo.com.pl