Inveo Sp. z o.o.

# USB Emulator

Instruction Manual

# Overview




## Purpose of the device

The USB Emulator servers the role of a USB storage emulator, enabling dynamic content control and update. It's intended for various applications, offering practical solutions such as:

- **Multimedia presentations on TV sets:** The USB Emulator is ideal for displaying advertisements on television screens.
- **Remote content management:** Thanks to the built-in FTP server, the device allows for remote control over memory, making at an effective tool for displaying multimedia contents.
- **Easy advertisement graphics upload:** Graphic advertisements in form of JPG files can be easily transferred via LAN. The contents can be added from any place, enabling flexibility in contents update.
- **Automatic display on the TV screen:** The USB Emulator allows advertising graphics to be automatically displayed on the TV screen, ensuring effective use of the SLIDESHOW function.
- **Location freedom:** By using the USB emulator, direct access to the TV is not needed. The device can be located anywhere, typically at a height of 2,5 to 3,5 meters.

## Changelog

**1.0** 4th of April 2025

- Manual revision v1.0

Table of contents


- Overview
  - Purpose of the device
  - Changelog
    - 1.0 4th of April 2025
- Device construction
  - Technical Characteristics
  - Connections diagram
  - Configuration
    - LAN configuration
  - FTP server connection
- Warranty and manufacturer's liability
  - Storage, operation and transport conditions
  - Disposal and decommissioning

# Device construction

## Technical Characteristics

| Parameter | Description |
|---|---|
| **Power supply** | 5V DC, 150mA from a USB port |
| **Memory size** | 8GB |
| **Supported file systems** | FAT16, FAT32 |
| **Read throughput** | 3,2Mbit/s |
| **Write throughput** | 1,1Mbit/s |
| **Protocols** | Built-in FTP server for loading data via LAN |
| **Communication** | Ethernet 10Mbps, RJ45 port<br>Optional RS485 |

### Dimensions

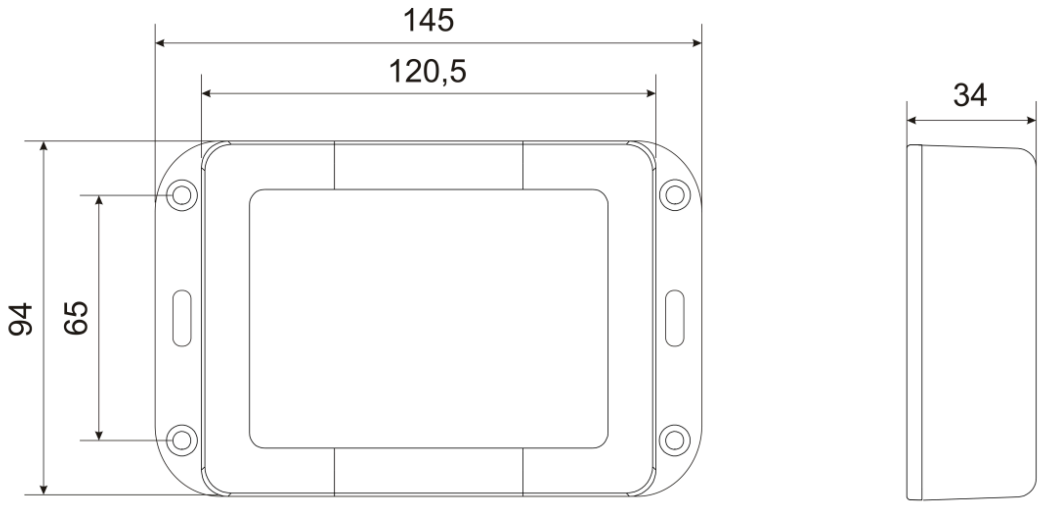

### General characteristics

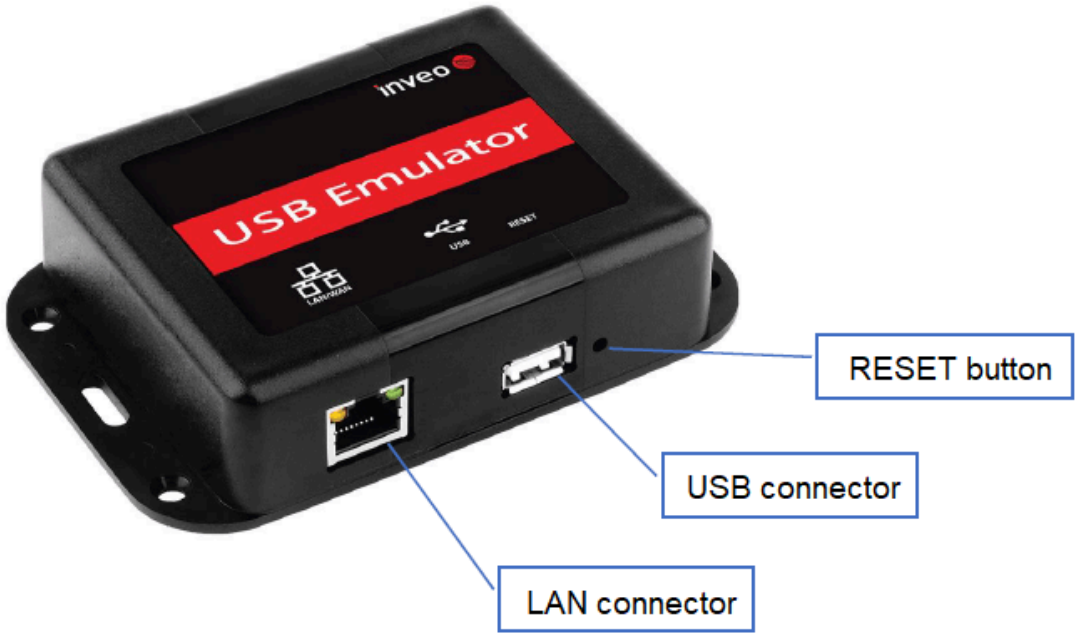


## Connections diagram




## Configuration

The device should be connected to the PC using the USB type A-A cable provided.

The device is powered from the USB port of the master device.

#### LAN configuration

To configure the network parameters, after connecting the USB cable to the PC, edit the `config.xml` file located in the emulator by right-clicking it, and clicking **Edit**.

Sample `config.xml` configuration:

```
<CONFIG>
    <NET_IP>192.168.111.10</NET_IP>
    <NET_MASK>255.255.255.0</NET_MASK>
    <NET_GW>192.168.111.1</NET_GW>
    <FTP_USER>admin</FTP_USER>
    <FTP_PASS>inveo</FTP_PASS>
    <USB_WHILE_FTP>1</USB_WHILE_FTP>
</CONFIG>
```

Input the correct values between corresponding tags:

| Section | Description |
|---|---|
| `<NET_IP>` | Module's IP address |
| `<NET_MASK>` | Subnet mask |
| `<NET_GW>` | Network gateway (Used in active FTP mode) |
| `<FTP_USER>` | FTP user name |
| `<FTP_PASS>` | FTP user password |
| `<USB_WHILE_FTP>` | USB access during an FTP session (1 – does not disconnect, 0 – disconnects) |

After making the changes, save the file and restart the device by disconnecting the USB cable for 5 seconds.

## FTP server connection

To establish connection with the FTP server, use any FTP client such as FileZilla, WinSCP, Total Commander etc. Connection parameters:

- **Address:** According to the LAN configuration (default 192.168.111.10),
- **Username:** According to configuration (default 'admin'),
- **Password:** According to configuration (default 'inveo').

The server supports both passive and active connection mode.

# Warranty and manufacturer's liability

> **Warning**
>
> **The manufacturer provides a two-year warranty for the device and post-warranty service for a period of 10 years from the date of introduction of the device to the market. The warranty covers all material and production defects.**

The manufacturer undertakes to respect the warranty agreement, if the following conditions are met:

- All repairs, changes, expansions and device calibrations are carried out by the manufacturer or an authorized service center,
- The power supply system meets the applicable standards,
- The device is operated in accordance with the suggestions presented in this manual,
- The device is operated in accordance with its intended purpose.

The manufacturer assumes no responsibility for consequences resulting from improper installation, improper use of the device, failure to comply with the instruction manual, and repairs made by unauthorized personnel.

> **Warning**
>
> **The device contains no user serviceable parts inside.**

## Storage, operation and transport conditions

**The device should be stored in enclosed rooms, where the atmosphere is free from vapours and corrosive substances:**

- Environment temperature from -30°C to +60°C (-22°F - 140°F),
- Humidity from 25% to 90% (condensation unacceptable),
- Atmospheric pressure from 700 to 1060 hPa.

**The device is intended to operate in the following conditions:**

- Environment temperature from -10°C do +55°C (14°F - 131°F),
- Humidity from 30% to 75%,
- Atmospheric pressure from 700 to 1060 hPa.

**Recommended transport conditions:**

- Environment temperature from -40°C do +85°C (-40°F - 185°F),
- Humidity from 5% to 95%,
- Atmospheric pressure from 700 to 1060 hPa.

**Installation and device operation:**

- The module should be operated in accordance with recommendations provided later in this manual.

## Disposal and decommissioning

In an event the device needs to be decommissioned (eg. after its intended life period is surpassed), it is recommended to contact the manufacturer or his representative, who are responsible to respond appropriately, i.e., to collect the device from the user. The user can alternatively contact companies specializing in electronic device or computer equipment disposal and/or decommissioning. Under no condition should the device be placed with other waste.