Inveo Sp. z o.o.

BusExpander

Instruction Manual



Purpose of the device

The BUS Expander has been designed to serve as a splitter that allows multiple sensors to be connected to signal bus-equipped devices such as Virtus, Daxi, IQIO or Hero Web Sensor. It enables easy expansion of possibilities of connecting multiple different sensors to a single device. To use its functions, simply connect the BUS Expander directly to the selected device and then connect the sensors required.

Changelog

1.1 14th of March 2025

- Added Daxi connection diagram

1.0 10th of March 2025

- Manual revision 1.0

Device construction

Dimensions

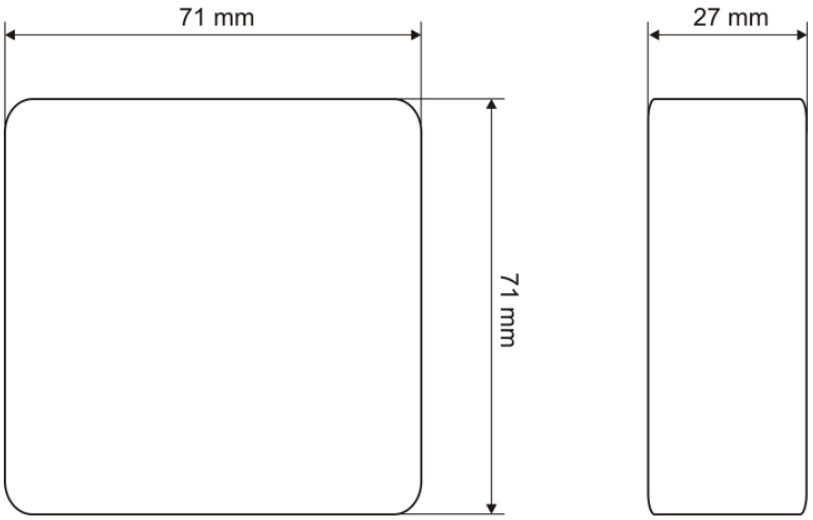

General view



Connections diagram

Using the BUS Expander with Hero

Connect the BUS Expander with the Hero Web Sensor using a three-wire cable to any **1-WIRE** input.
The sensors should be connected using a three-wire cable or to an **RJ12** connector. Remember that the Hero Web Sensor supports a maximum of **4** sensors.

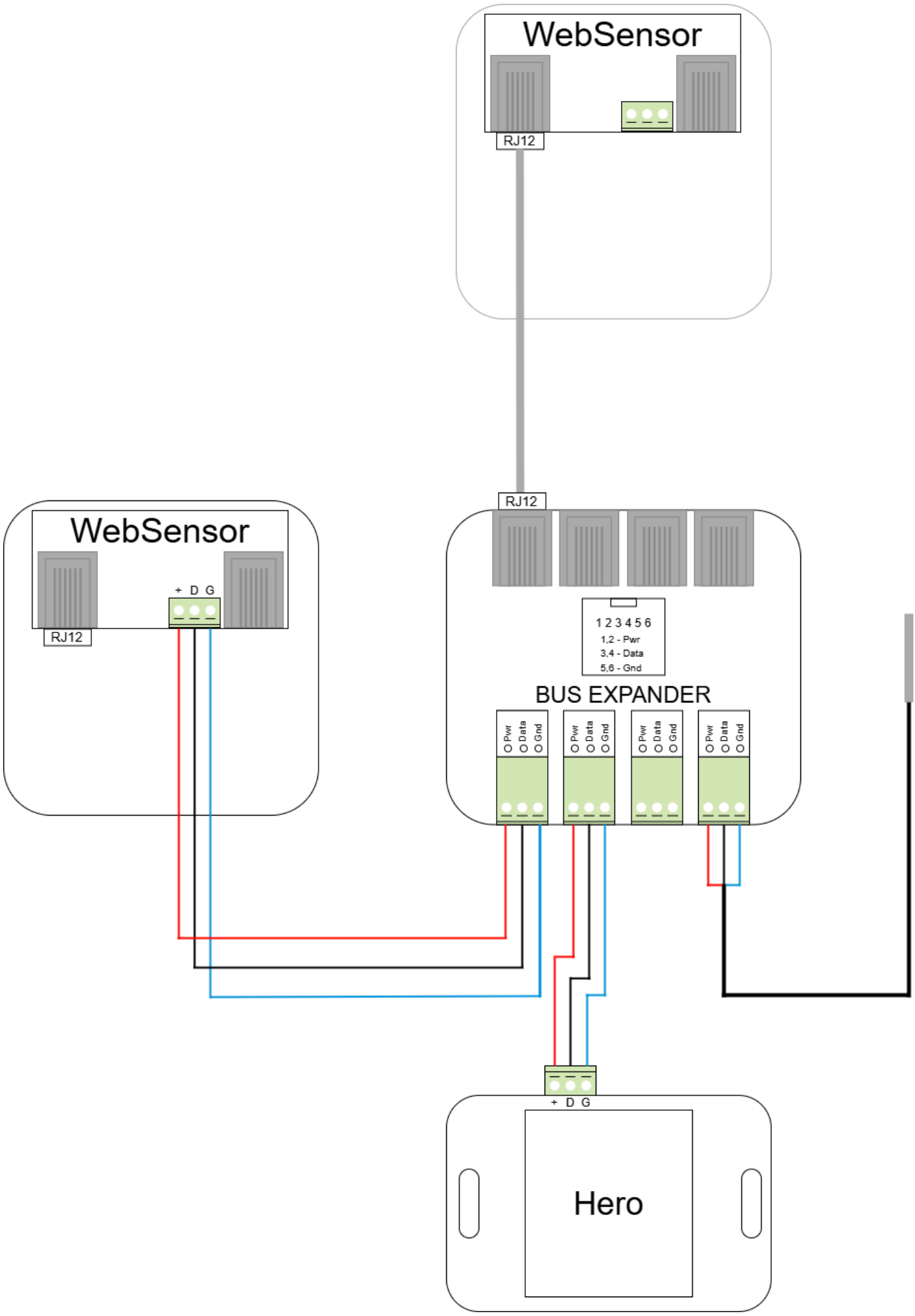
WebSensor
RJ12
WebSensor
+ D G
RJ12
RJ12
1 2 3 4 5 6
1,2 - Pwr
3,4 - Data
5,6 - Gnd
BUS EXPANDER
Pwr
Data
Gnd
+ D G
Hero

Using the BUS Expander with IQIO

Connect the BUS Expander with the IQIO device using a three-wire cable to any **1-WIRE** input.
The sensors should be connected using a three-wire cable or to an **RJ12** connector. Remember that the IQIO device supports a maximum of **6** sensors by default, while IQIO Sens – **2**.

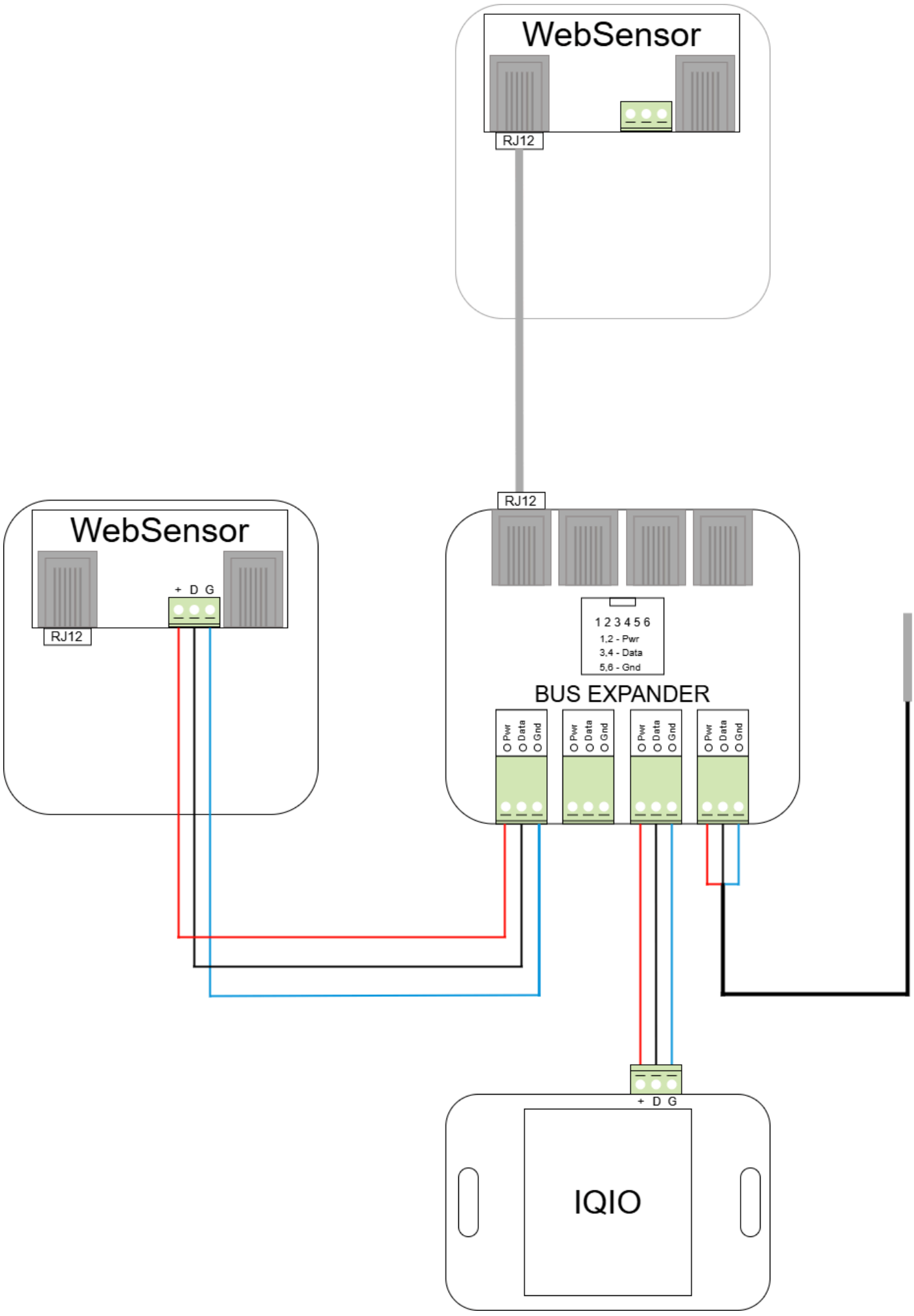
WebSensor
RJ12
WebSensor
+ D G
RJ12
RJ12
1 2 3 4 5 6
1,2 - Pwr
3,4 - Data
5,6 - Gnd
BUS EXPANDER
Pwr
Data
Gnd
Pwr
Data
Gnd
Pwr
Data
Gnd
Pwr
Data
Gnd
+ D G
IQIO

Using the BUS Expander with Daxi

Connect the BUS Expander with Daxi using a flat RJ12 cable to any **BUS** input. The sensors should be connected using a three-wire cable or to an **RJ12** connector. Remember that Daxi supports a maximum of **16** sensors.

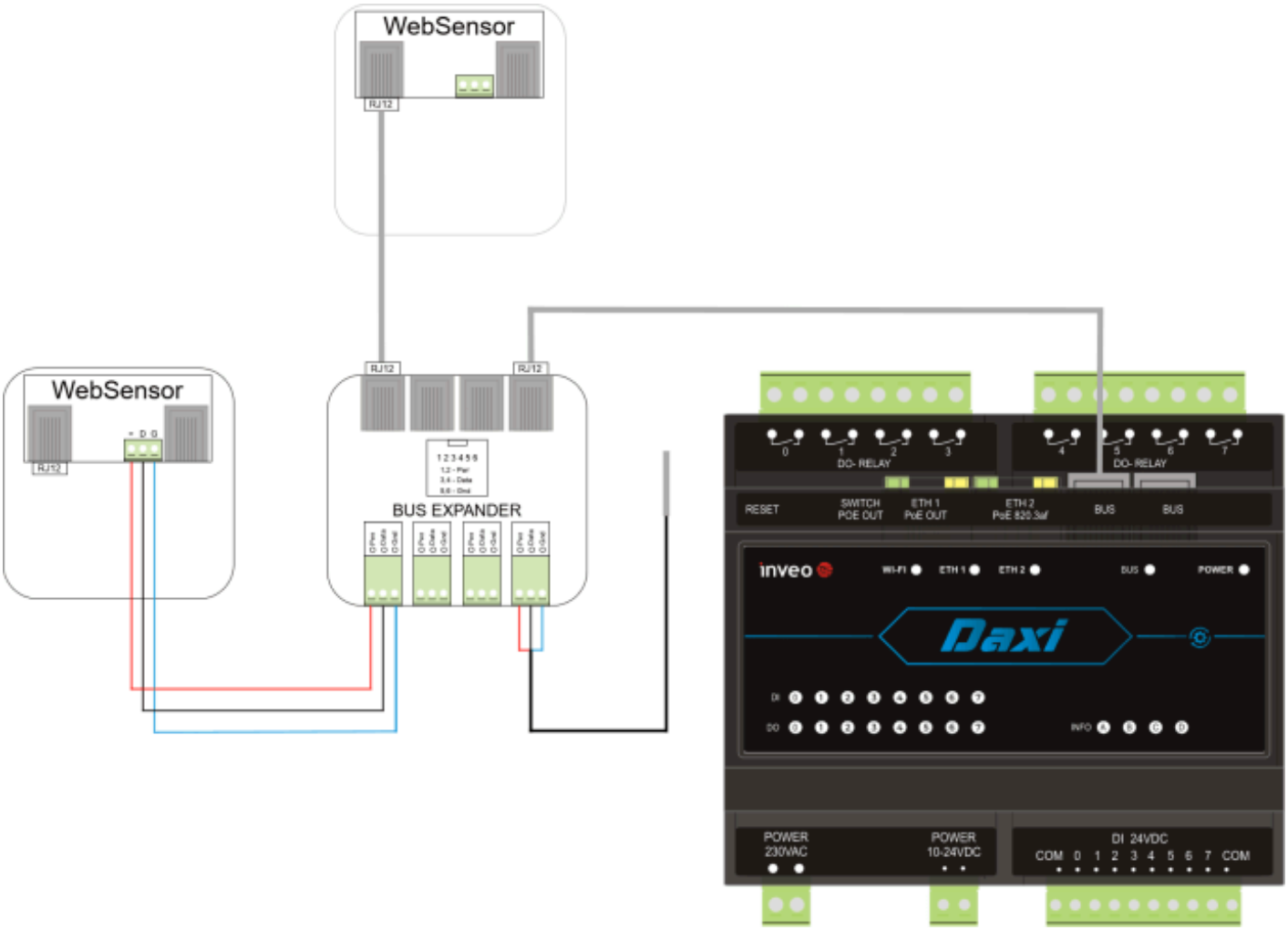

Warranty and manufacturer's liability

> **Warning**
>
> **The manufacturer provides a two-year warranty for the device and post-warranty service for a period of 10 years from the date of introduction of the device to the market. The warranty covers all material and production defects.**

The manufacturer undertakes to respect the warranty agreement, if the following conditions are met:

- All repairs, changes, expansions and device calibrations are carried out by the manufacturer or an authorized service center,
- The power supply system meets the applicable standards,
- The device is operated in accordance with the suggestions presented in this manual,
- The device is operated in accordance with its intended purpose.

The manufacturer assumes no responsibility for consequences resulting from improper installation, improper use of the device, failure to comply with the instruction manual, and repairs made by unauthorized personnel.

> **Warning**
>
> **The device contains no user serviceable parts inside.**

Storage, operation and transport conditions

The device should be stored in enclosed rooms, where the atmosphere is free from vapours and corrosive substances:

- Environment temperature from -30°C to +60°C (-22°F - 140°F),
- Humidity from 25% to 90% (condensation unacceptable),
- Atmospheric pressure from 700 to 1060 hPa.

The device is intended to operate in the following conditions:

- Environment temperature from -10°C do +55°C (14°F - 131°F),
- Humidity from 30% to 75%,
- Atmospheric pressure from 700 to 1060 hPa.

Recommended transport conditions:

- Environment temperature from -40°C do +85°C (-40°F - 185°F),
- Humidity from 5% to 95%,
- Atmospheric pressure from 700 to 1060 hPa.

Installation and device operation:

- The module should be operated in accordance with recommendations provided later in this manual.

Disposal and decommissioning

In an event the device needs to be decommissioned (eg. after its intended life period is surpassed), it is recommended to contact the manufacturer or his representative, who are responsible to respond appropriately, i.e., to collect the device from the user. The user can alternatively contact companies specializing in electronic device or computer equipment disposal and/or decommissioning. Under no condition should the device be placed with other waste.