Inveo Sp. z o.o.

Lantick (all versions)

Instruction Manual

Overview

Warning

This manual applies only to the firmware version v4.26 onwards. Inveo does not guarantee that the information contained in this document applies to previous firmware revisions.



Purpose of the device

Lantick modules are general-purpose electrical circuit control devices. The modules combine the function of outputs (relays or High-Side Power Switch) control with support of digital inputs (potential-free and voltage). Additionally the inputs may operate in the pulse count mode, which further expands their capabilities.

Thanks to LAN communication, the Lantick allows for remote control and device condition monitoring. Different models offer various input and output configurations, with their numbers incorporated into model numbers making selection for specific needs easier.

Changelog

Table of contents

- Overview
  - Purpose of the device
  - Changelog
- Device construction
  - Lantick PE-0-1
  - Lantick PE-1-0
  - Lantick PE-1-1
  - LanTick PE-2-2
  - Lantick PE-0-4
  - LanTick PE-4-4
  - Lantick PE-0-8
  - Lantick PE-8-0
  - Lantick PE-0-16
  - Lantick PE-16-0
- Network configuration
  - Communication with a module from an external network
- Device functions
  - Device status
  - Visualizations
  - Output channel configuration
  - Input channel configuration
    - Input simulation mode
  - SNMP server configuration
  - Communication protocols and administration
- Communication protocols
  - Comm2Other – KNX
    - All KNX devices preview
    - Frame format converter
    - Controlling the output channels
    - KNX commands
    - KNX commands for channel configuration in shutter/gate mode
    - Configuration of triggers – Input channels
    - KNX addressing
  - Comm2Other – TCP/UDP
  - Comm2Other – HTTP GET

    - Cloud control
    - Windows command line control programme
    - Linux control programme
    - Modbus TCP
        - Holding Registers addressing
        - Coils addressing
    - HTTP GET
    - TCP/UDP/IP communication protocol description
    - TCP/UDP in program control
- Application examples
    - Bridge connection between two Lantick modules
    - Window shutter motor connection to the PE-2-2 module
    - Monitoring of communication between two Lantick devices using the Comm Monitor function
    - Lighting and shutter control in a guest room via KNX
    - One-to-many or many-to-one communication with connection loss failsafe
- Factory settings, backup
    - Backup / Restoring user settings
- Warranty and manufacturer's liability
    - Storage, operation and transport conditions
    - Disposal and decommissioning

Device construction

Lantick PE-0-1

Technical characteristics

Parameter	Description
Power supply	Passive PoE 10-24V DC via a PoE adapter
Power consumption	Max. 1,5W
Input	**Amount of inputs:** 1 **Input type:** NO (application of voltage will damage the module) **Maximum counter value:** 4 294 967 296 **Maximum input frequency:** 1000Hz
Communication	Ethernet 10Mbps Half Duplex, RJ45
Weight	ca. 37g (1,3oz)

Dimensions

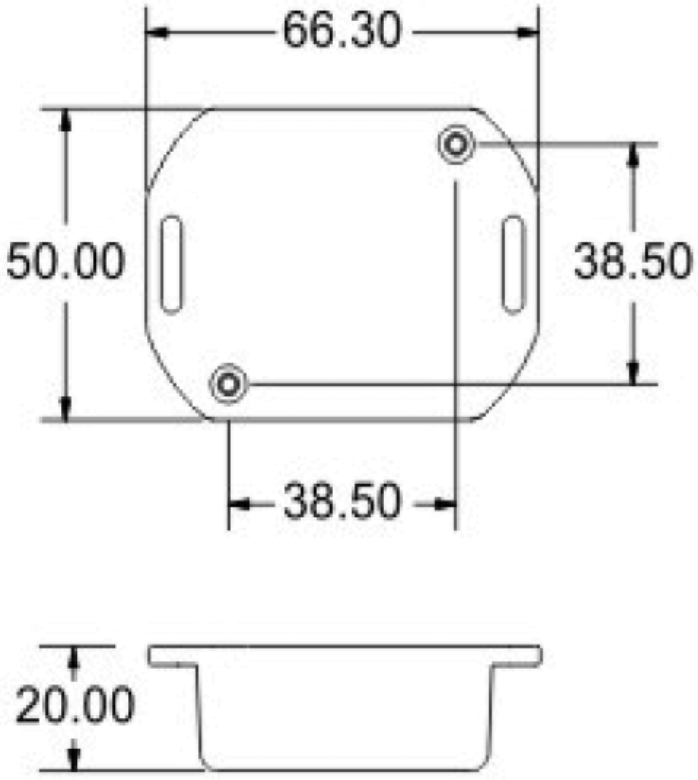

Information

All dimensions are in millimeters.

General view



Signaling

Name	Description
POWER	Module power supply
INPUT	Input state

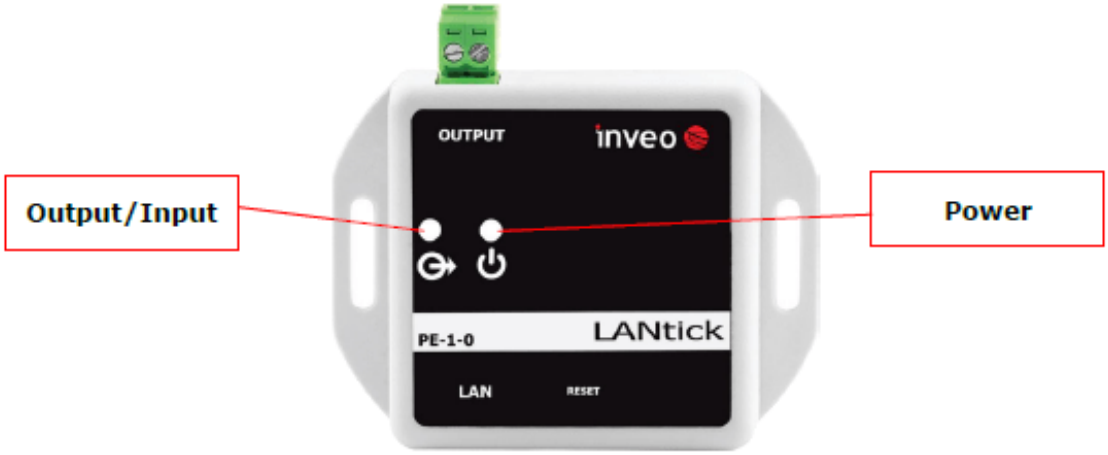

Input

Binary input schematics are shown on the image below.



Lantick PE-1-0

Technical characteristics

Parameter	Description
Power supply	Passive PoE 10-24V DC via a PoE adapter
Power consumption	Max. 1,5W
Output	**Amount of outputs:** 1 **Output type:** relay **Maximum operating voltage:** 30V DC **Maximum relay load:** 1A **NO output** (normally open) **Activation time:** 1ms **Deactivation time:** 5ms **Operating mode:** bistable, astable, monostable (single trigger) **On/off time resolution:** 100ms
Communication	Ethernet 10Mbps Half Duplex, RJ45

Dimensions

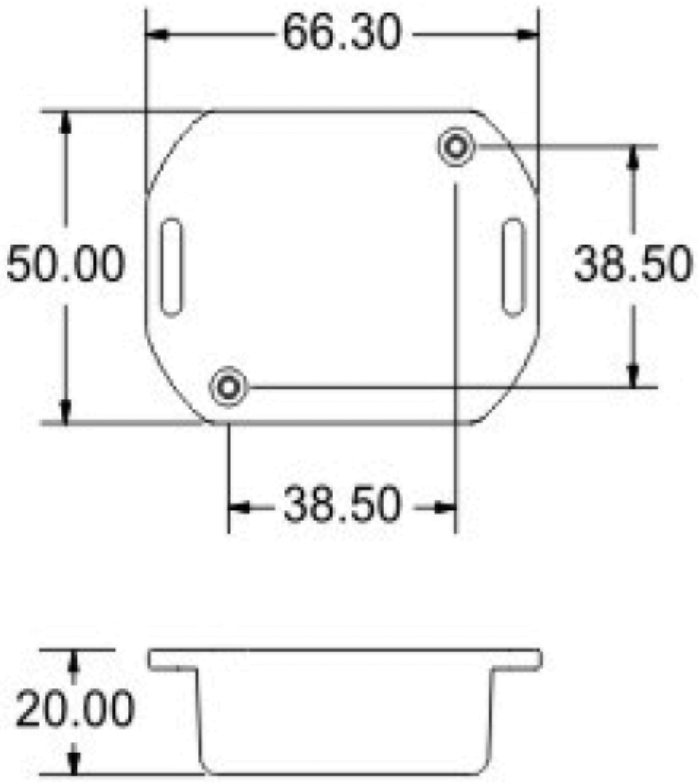

Information

All dimensions are in millimeters.

General view



Signaling

Name	Description
POWER	Module power supply
OUTPUT	Output state

Lantick PE-1-1

Technical characteristics

Parameter	Description
Power supply	**10-24V DC** (3,5mm screw terminal) or 33-57V **PoE IEEE 802.3af**
Power consumption	Max. 2W
Output	**Amount of outputs:** 1 **Output type:** relay, NO **Maximum operating voltage:** 30V DC **Maximum relay load:** 1A **NO output** (normally open) **Activation time:** 1ms **Deactivation time:** 5ms **Operating mode:** bistable, astable, monostable (single trigger) **On/off time resolution:** 100ms, **Screw terminal output**
Input	**Input type**: NO (application of voltage will damage the module) **Maximum counter value**: 4 294 967 296 **Maximum input frequency**: 1000Hz
Communication	Ethernet 10Mbps Half Duplex, RJ45
Weight	ca. 67g (2,4oz)

Dimensions

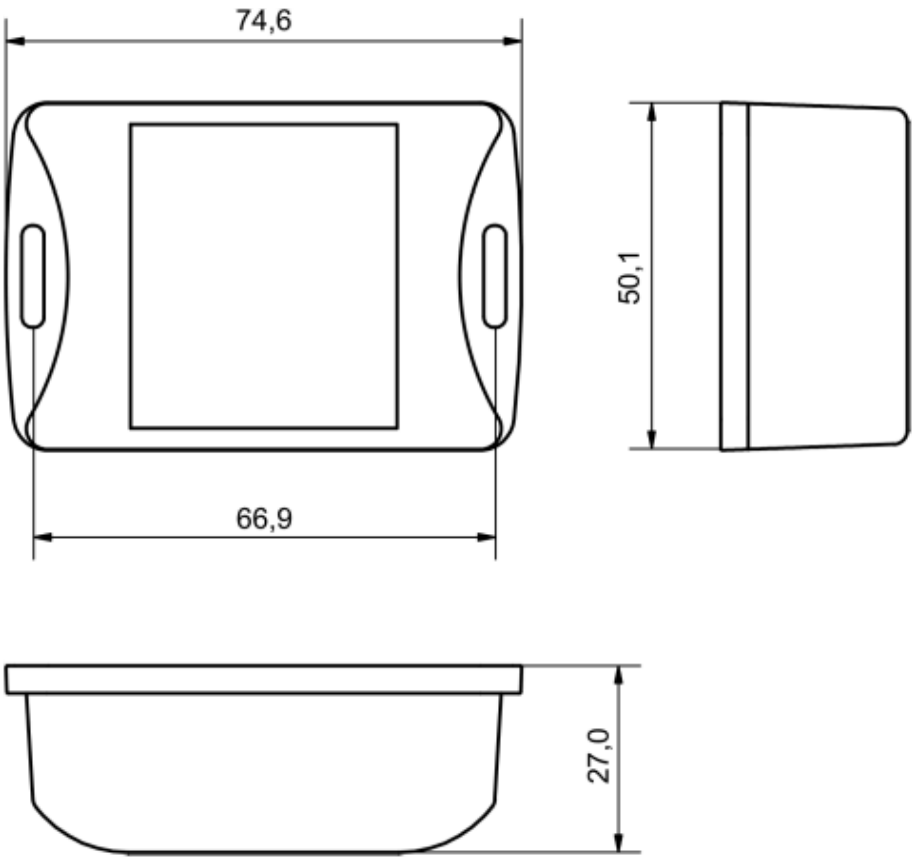

Information

All dimensions are in millimeters.

General view



Signaling

The module is equipped with a display that informs the user about the input and output state:

- When an output is inactive, the display shows the `o` symbol, when it is active – `0`,
- Similarly an inactive input channel is signalled by the `i` symbol, when it is active – `I`.

Thanks to this system, easy channel state preview is possible.

Input

Binary input schematics are shown on the image below.



LanTick PE-2-2

Technical characteristics

Parameter	Description
Power supply	10-24V DC (3,5mm screw terminal) or Passive PoE 10-24V DC
Power consumption	1,5 – 3W (depending on the amount of activated outputs)
Outputs	**Amount of outputs:** 2 **Output type:** relay, NO and NC **Maximum operating voltage:** 250V AC **Maximum relay load:** 4A **Activation time:** 1ms **Deactivation time:** 5ms **Operating mode:** bistable, astable, monostable (single trigger), shutter **On/off time resolution:** 100ms, **Screw terminal output**
Inputs	**Amount of inputs:** 2 **Input type:** optocoupler (potential free, pre-polarized) or voltage **Input voltage:** 10-24V **Maximum counter value:** 4 294 967 296 **Maximum input frequency:** 1000Hz
Communication	Ethernet 10Mbps Half Duplex, RJ45
Weight	ca. 123g (4,3oz)

Dimensions

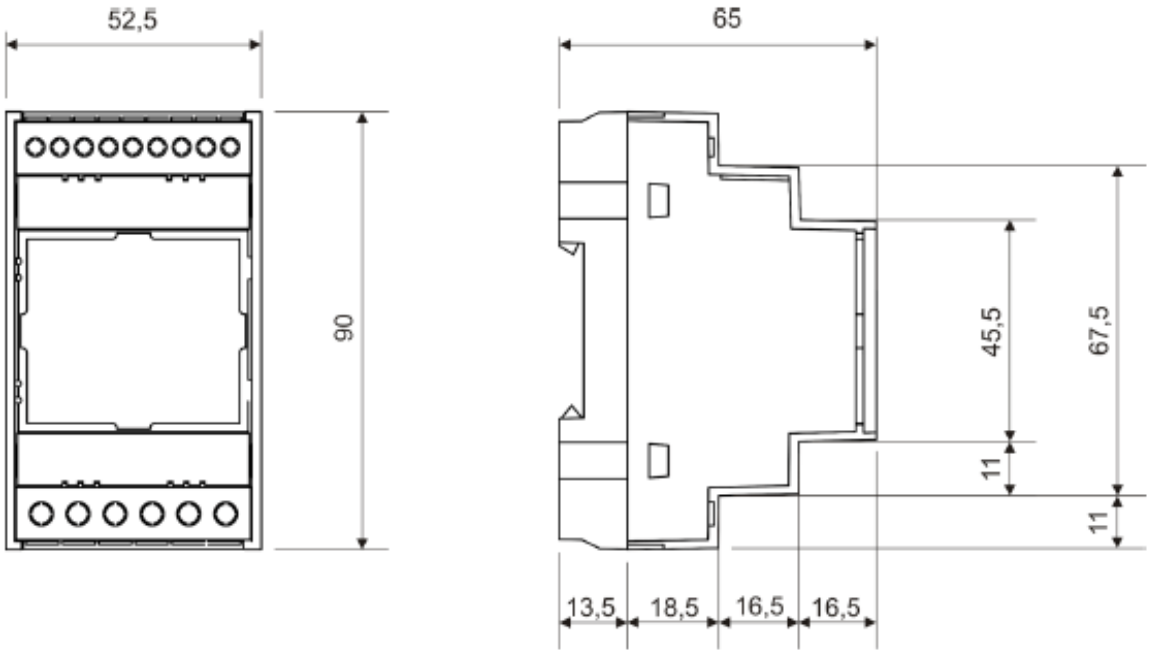

Information

All dimensions are in millimeters.

General view



Signaling

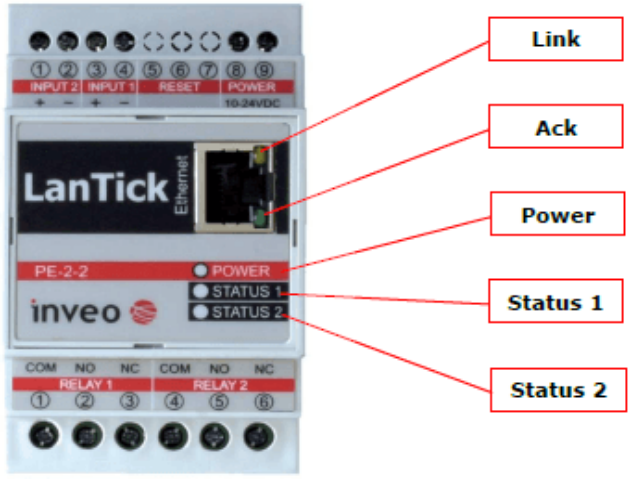

Name	Description
POWER	Module power supply
Status 1	Assignable input or output state
Status 2	Assignable input or output state
LINK	Active LAN connection
ACK	Active LAN connection

Inputs

Binary input schematics are shown on the image below. The upper schematic applies to the opto-coupled input. The lower schematic applies to the NO input.

The input type is determined during device manufacturing. It's possible to assign different configurations to both inputs.





Information

The input in voltage mode is designed for 10-24V input voltage.

Module connectors

Upper section

Terminal number	Name	Description
1 ÷ 2	Input 2	Digital input 2
3 ÷ 4	Input 1	Digital input 1
5 ÷ 7	Reset	Reset button
8	Power	10-24V DC power supply input
9	Power	10-24V DC power supply input

Information

The power can be applied to the DC connectors disregarding polarity. This will not damage the module.

Lower section

Terminal number	Name	Description
1	COM	Relay 1 common contact
2	NO	Relay 1 NO contact
3	NC	Relay 1 NC contact
4	COM	Relay 2 common contact
5	NO	Relay 2 NO contact
6	NC	Relay 2 NC contact

Lantick PE-0-4

Technical characteristics

Parameter	Description
Power supply	10-24V DC (3,5mm screw terminal) or Passive PoE 10-24V DC
Power consumption	1,5 – 3W (depending on the amount of activated outputs)
Inputs	**Amount of inputs:** 2 **Input type:** optocoupler (potential free, pre-polarized) or voltage **Input voltage:** 10-24V **Maximum counter value:** 4 294 967 296 **Maximum input frequency:** 1000Hz
Communication	Ethernet 10Mbps Half Duplex, RJ45

Dimensions

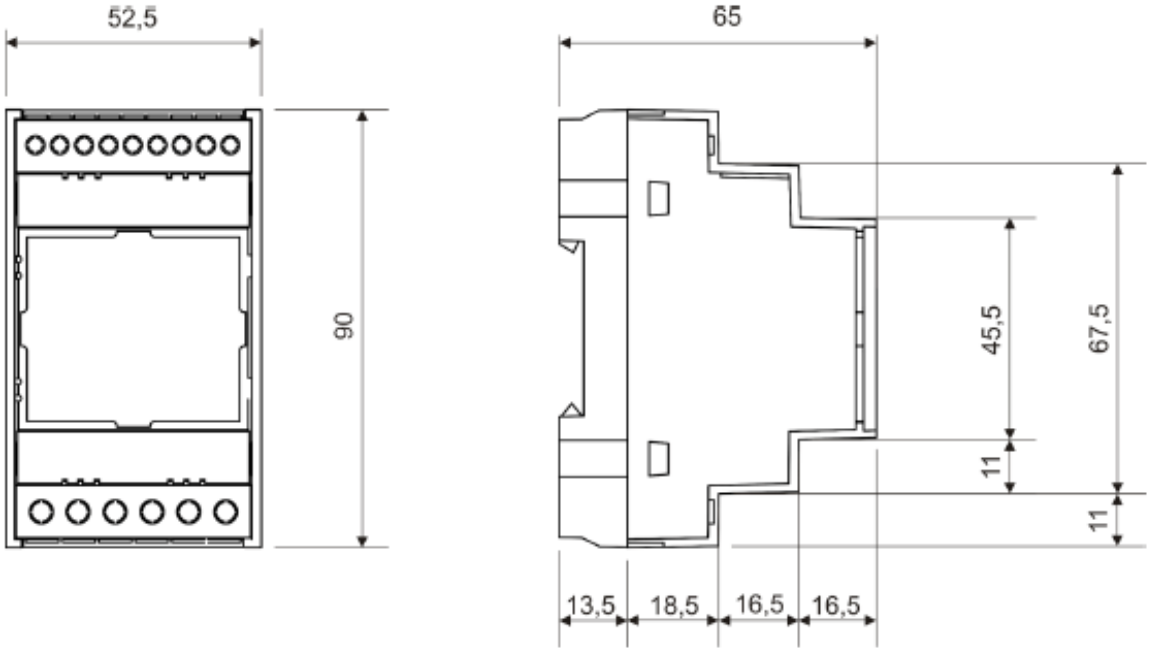

Information

All dimensions are in millimeters.

General view

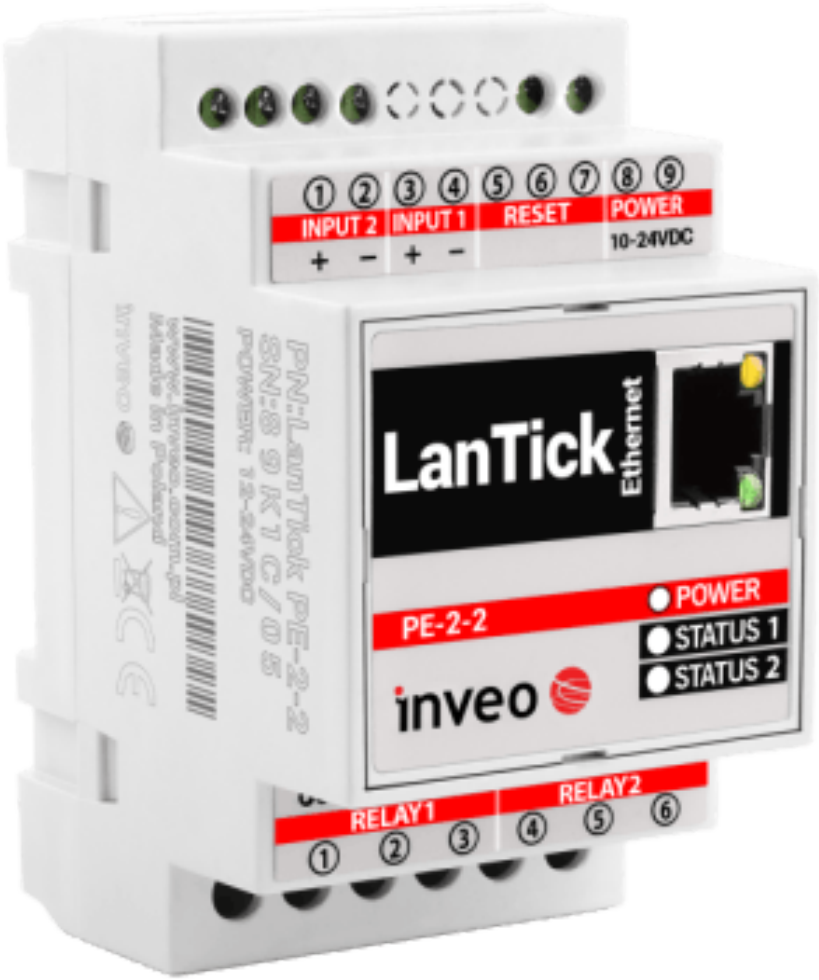

Signaling

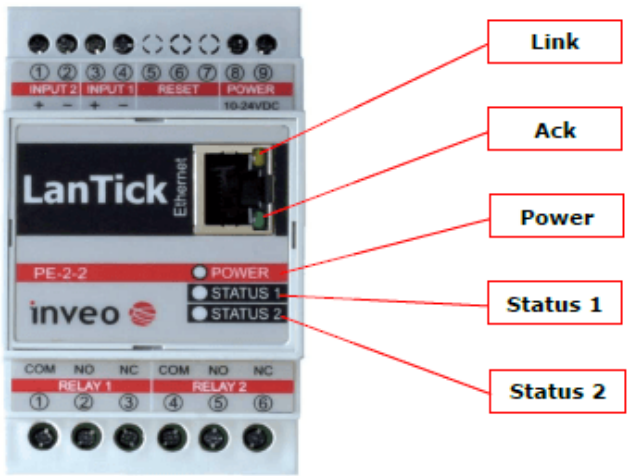

Name	Description
POWER	Module power supply
Status 1	Assignable input state
Status 2	Assignable input state
LINK	Active LAN connection
ACK	Active LAN connection

Inputs

Binary input schematics are shown on the image below. The upper schematic applies to the opto-coupled input. The lower schematic applies to the NO input.

The input type is determined during device manufacturing. It's possible to assign different configurations to both inputs.





Information

The input in voltage mode is designed for 10-24V input voltage.

Module connectors

Upper section

Terminal number	Name	Description
9	Reset	Reset button
10	Power	10-24V DC power supply input
11	Power	10-24V DC power supply input

Information

The power can be applied to the DC connectors disregarding polarity. This will not damage the module.

Lower section

Terminal number	Name	Description
1 ÷ 2	IN1	Binary input 1
3 ÷ 4	IN2	Binary input 2
5 ÷ 6	IN3	Binary input 3
7 ÷ 8	IN4	Binary input 4

LanTick PE-4-4

Technical characteristics

It is possible to select the power supply method:

- **10-24V DC power supply** connected to the screw terminal (Pwr switches up),
- **LAN Passive PoE** using the blue and brown pairs (Pwr switches down).

> **Warning**
>
> **The blue and brown pairs are supplied with the DC power supply voltage when the Pwr switch is in the "down" position. If the module is connected to a network switch, it can be damaged.**

Parameter	Description
Power supply	10-24V DC (3,5mm screw terminals) or Passive PoE 10-24V DC
Power consumption	1,5 – 4,2W (depending on the amount of activated outputs)
Outputs	**Amount of outputs:** 4 **Output type:** relay, NO **Maximum operating voltage:** 250V AC **Maximum relay load:** 2A **Activation time:**: 1ms **Deactivation time:** 5ms **Operating mode:** bistable, astable, monostable (single trigger), shutter **On/off time resolution:** 100ms, **Screw terminal output**
Inputs	**Amount of inputs:** 4 **Input type:** optocoupler or voltage **Input voltage:** 10-24V **Maximum counter value:** 4 294 967 296 **Maximum input frequency:** 1000Hz
Communication	Ethernet 10Mbps Half Duplex, RJ45
Weight	ca. 203g (7,2oz)

Dimensions

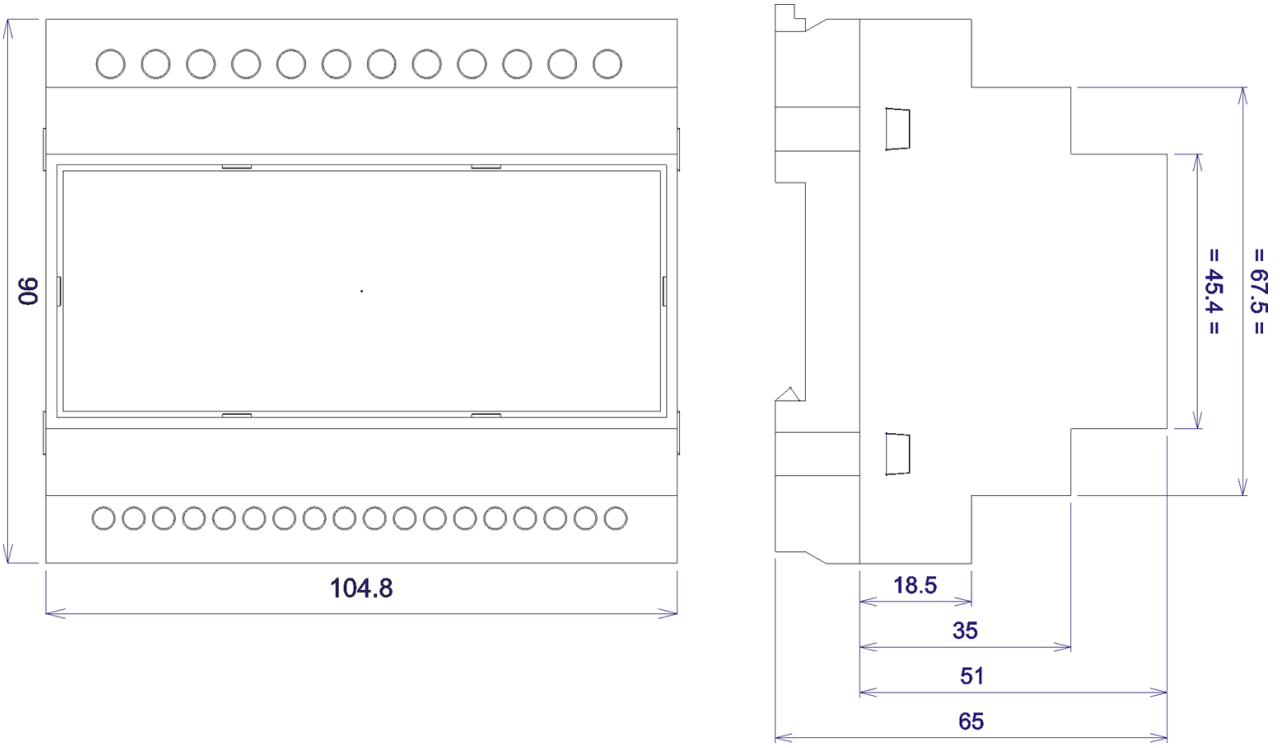

Information

All dimensions are in millimeters.

General view:

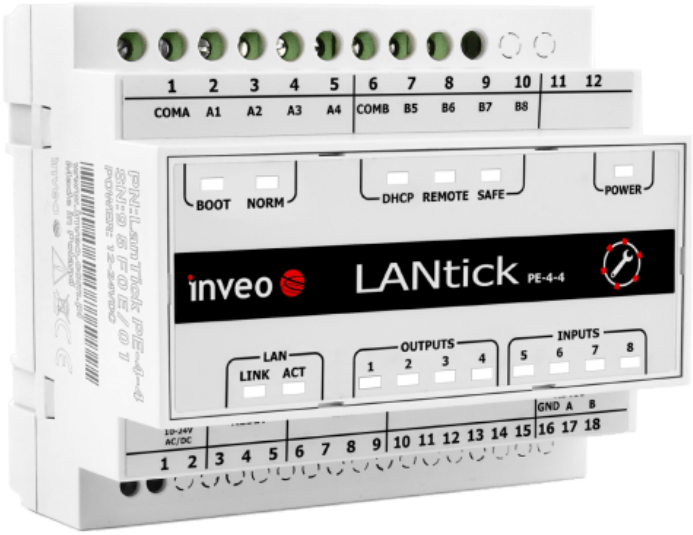

Signaling

Name	Description
POWER	Module power supply
LINK	Active LAN connection
ACT	Active LAN connection
OUTPUTS 1	Relay output 1 state
OUTPUTS 2	Relay output 2 state
OUTPUTS 3	Relay output 3 state
OUTPUTS 4	Relay output 4 state
INPUTS 5	Input 5 state
INPUTS 6	Input 6 state
INPUTS 7	Input 7 state
INPUTS 8	Input 8 state
SAFE	Modbus communication loss
REMOTE	Server connection
DHCP	DHCP mode active
NORM	Normal operation mode
BOOT	Module is in Bootloader mode

Outputs

The relay output sections are shown on the image below. The COM contact is common for all 4 relays.

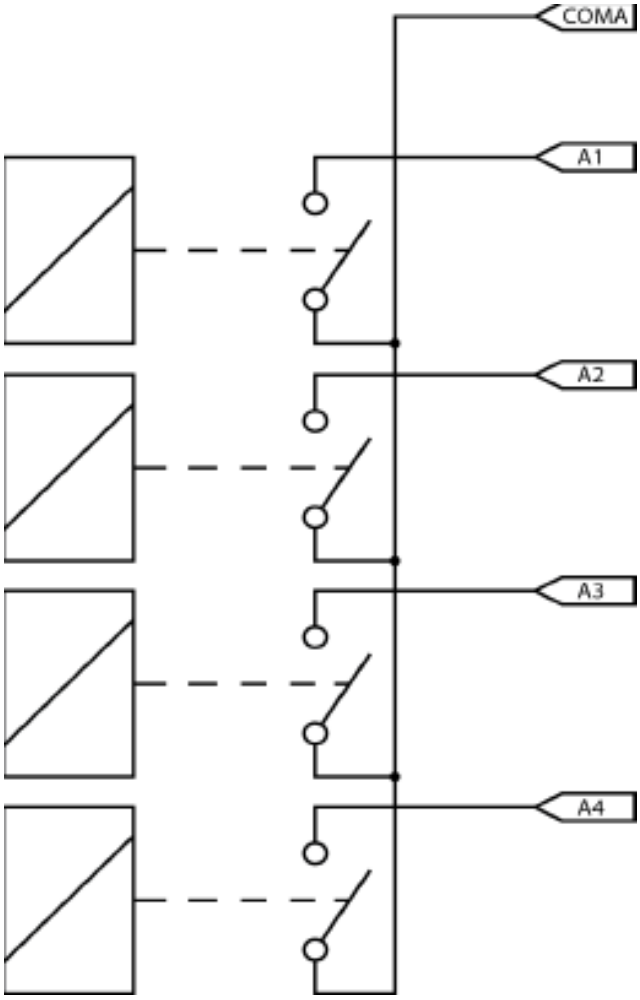

Inputs

Binary input schematics are shown on the image below.

Information

The schematic applies to a fully optocoupled input.
The input is designed for 10-24V input voltage.

The input sections are shown on the image below. The COM contact is common for all 4 inputs.

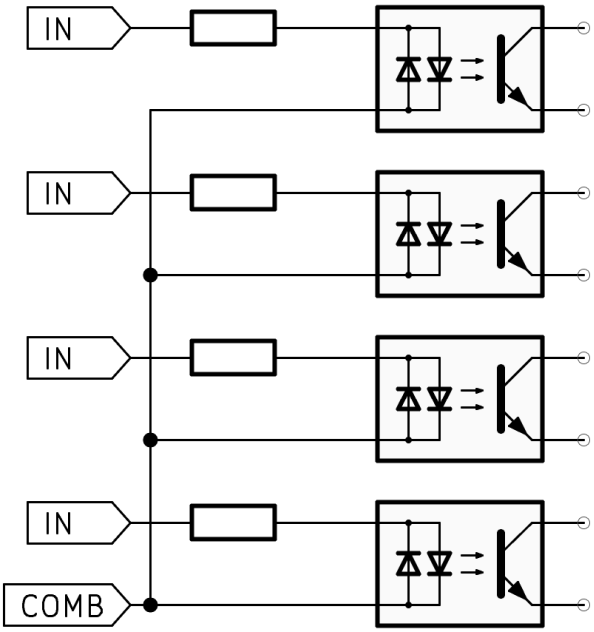

Module connectors

Upper section

Terminal number	Name	Description
1	COM A	Relays 1 ÷ 4 common contact
2	A1	Relay 1 NO contact
3	A2	Relay 2 NO contact
4	A3	Relay 3 NO contact
5	A4	Relay 4 NO contact
6	COM B	Inputs 5 ÷ 8 common contact
7	B5	Input 5
8	B6	Input 6
9	B7	Input 7
10	B8	Input 8

Lower section

Terminal number	Name	Description
1 ÷ 2	Power	10-24V DC power supply input
3 ÷ 4	Pwr select	Power supply selection
5	Reset	Bootloader mode button (available only in emergency mode)
6 ÷ 9	LAN	LAN socket
16 ÷ 18	RS485	Unused

Information

The power can be applied to the DC connectors disregarding polarity. This will not damage the module.

Lantick PE-0-8

Technical characteristics

It is possible to select the power supply method:

- **10-24V DC power supply** connected to the screw terminal (Pwr switch up),
- **LAN Passive PoE** using the blue and brown pairs (Pwr switch down).

> **Warning**
>
> **The blue and brown pairs are supplied with the DC power supply voltage when the Pwr switch is in the "down" position. If the module is connected to a network switch, it can be damaged in this situation.**

Parameter	Description
Power supply	10-24V DC (3,5mm screw terminals) or Passive PoE 10-24V DC
Power consumption	1,5 – 4,2W (depending on the amount of activated outputs)
Inputs	**Amount of inputs:** 8 **Input type:** optocoupler or voltage **Input voltage:** 10-24V **Maximum counter value:** 4 294 967 296 **Maximum input frequency:** 1000Hz
Communication	Ethernet 10Mbps Half Duplex, RJ45
Weight	ca. 172g (6oz)

Dimensions

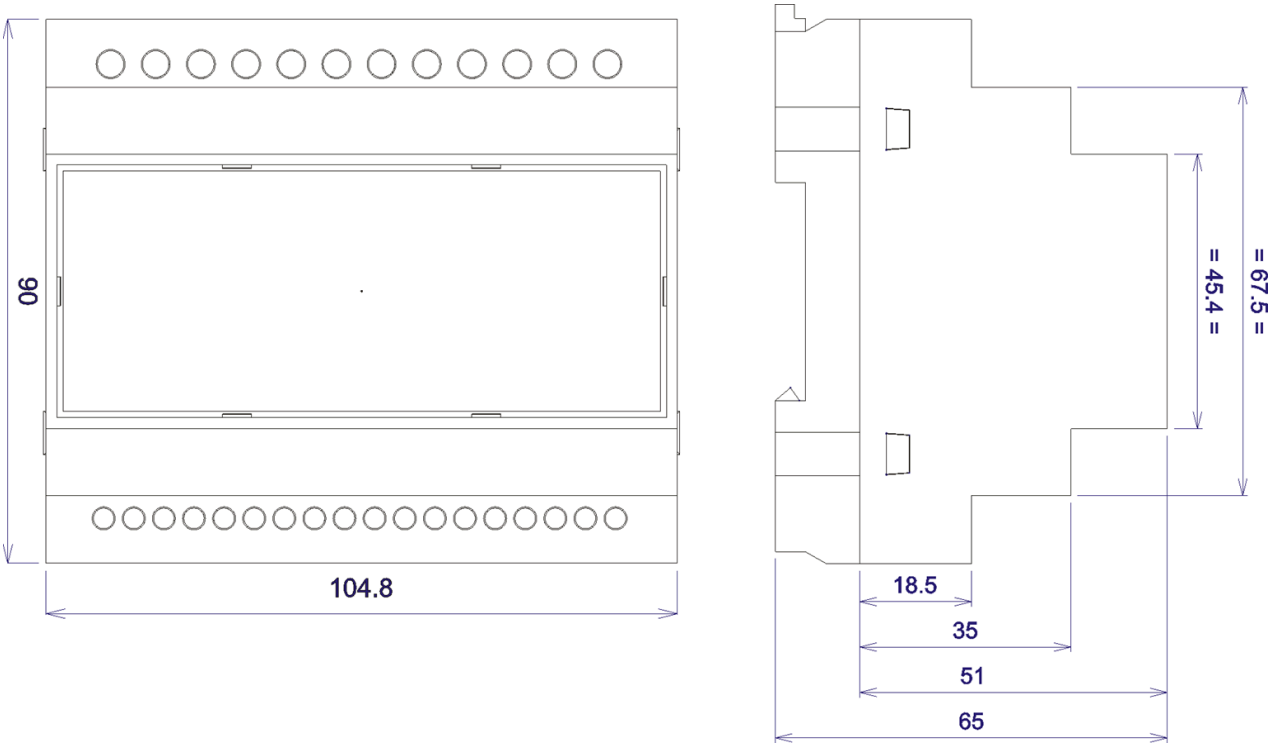

Information

All dimensions are in millimeters.

General view:

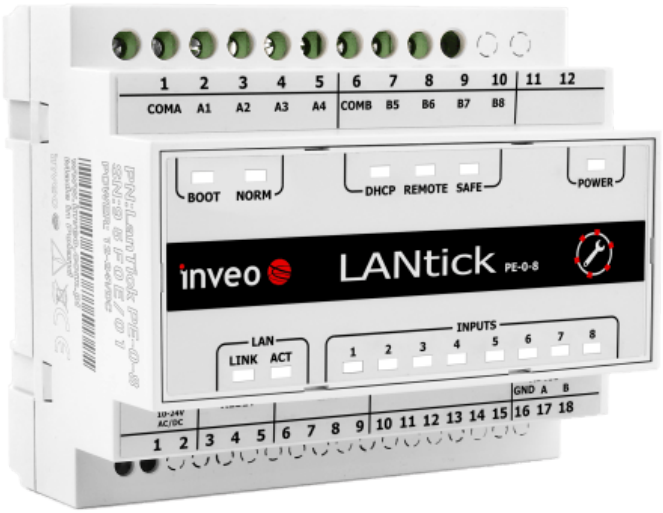

Signaling

Name	Description
POWER	Module power supply
LINK	Active LAN connection
ACT	Active LAN connection
INPUTS 1	Input 1 state
INPUTS 2	Input 2 state
INPUTS 3	Input 3 state
INPUTS 4	Input 4 state
INPUTS 5	Input 5 state
INPUTS 6	Input 6 state
INPUTS 7	Input 7 state
INPUTS 8	Input 8 state
SAFE	Modbus communication loss
REMOTE	Server connection
DHCP	DHCP mode active
NORM	Normal operation mode
BOOT	Module is in Bootloader mode

Inputs

Binary input schematics are shown on the image below.



Information

The schematic applies to a fully optocoupled input.
The input is designed for 10-24V input voltage.

The input sections are shown on the image below. A COM contact is common for each group of 4 inputs.

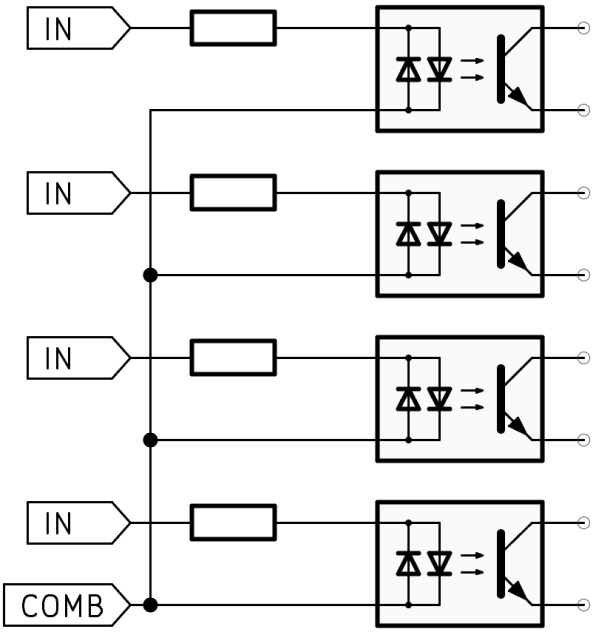

Module connectors

Upper section

Terminal number	Name	Description
1	COM A	Inputs 1 ÷ 4 common contact
2	A1	Input 1
3	A2	Input 2
4	A3	Input 3
5	A4	Input 4
6	COM B	Inputs 5 ÷ 8 common contact
7	B5	Input 5
8	B6	Input 6
9	B7	Input 7
10	B8	Input 8

Lower section

Terminal number	Name	Description
1 ÷ 2	Power	10-24V DC power supply input
3 ÷ 4	Pwr select	Power supply selection
5	Reset	Bootloader mode button (available only in emergency mode)
6 ÷ 9	LAN	LAN socket
16 ÷ 18	RS485	Unused

Information

The power can be applied to the DC connectors disregarding polarity. This will not damage the module.

Lantick PE-8-0

Technical characteristics

It is possible to select the power supply method:

- **10-24V DC power supply** connected to the screw terminal (Pwr switches up),
- **LAN Passive PoE** using the blue and brown pairs (Pwr switches down).

> **Warning**
>
> **The blue and brown pairs are supplied with the DC power supply voltage when the Pwr switch is in the "down" position. If the module is connected to a network switch, it can be damaged in this situation.**

Parameter	Description
Power supply	10-24V DC (3,5mm screw terminals) or Passive PoE 10-24V DC
Power consumption	1,5 – 4,2W (depending on the amount of activated outputs)
Outputs	**Amount of outputs:** 8 **Output type:** relay, NO **Maximum operating voltage:** 250V AC **Maximum relay load:** 2A **Activation time:**: 1ms **Deactivation time:** 5ms **Operating mode:** bistable, astable, monostable (single trigger), shutter **On/off time resolution:** 100ms, **Screw terminal output**
Communication	Ethernet 10Mbps Half Duplex, RJ45
Weight	ca. 235g (8,3oz)

Dimensions

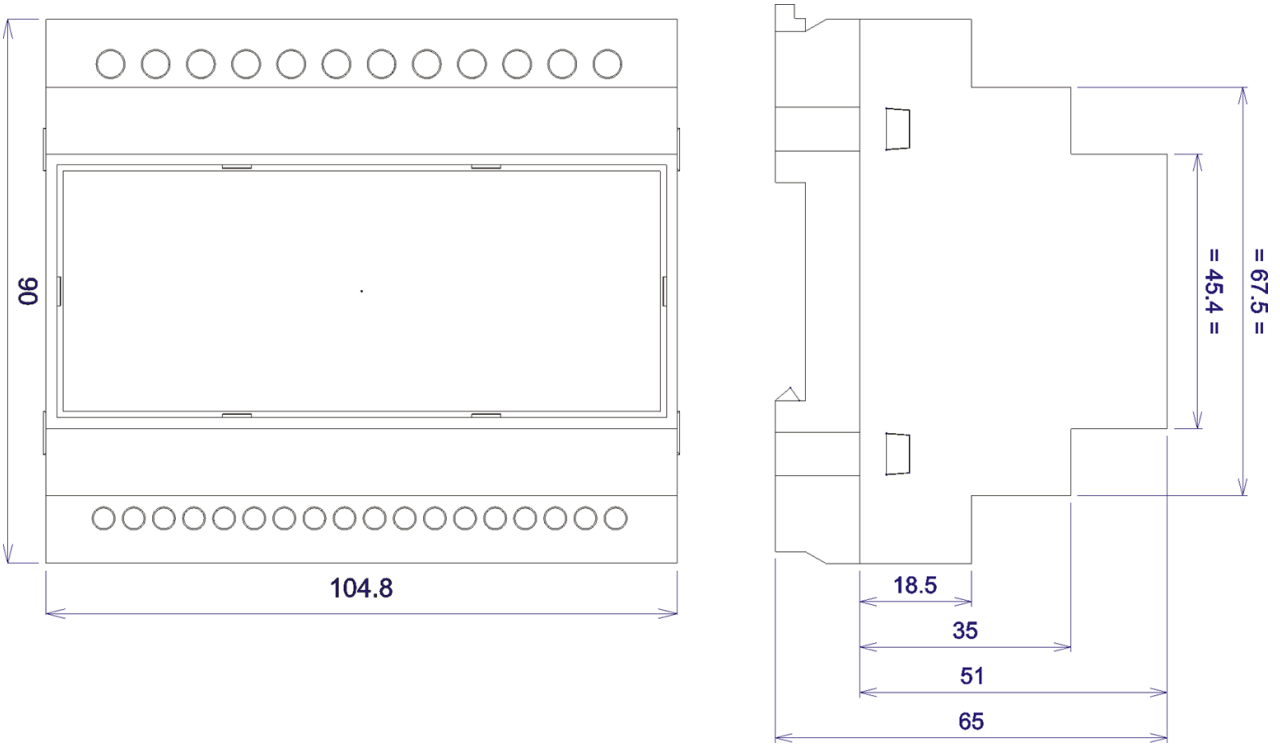

Information

All dimensions are in millimeters.

General view

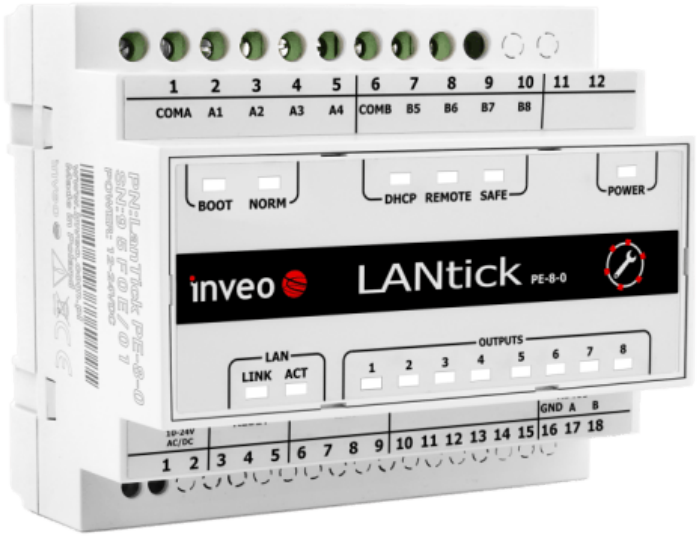

Signaling

Name	Description
POWER	Module power supply
LINK	Active LAN connection
ACT	Active LAN connection
OUTPUTS 1	Relay output 1 state
OUTPUTS 2	Relay output 2 state
OUTPUTS 3	Relay output 3 state
OUTPUTS 4	Relay output 4 state
OUTPUTS 5	Relay output 5 state
OUTPUTS 6	Relay output 6 state
OUTPUTS 7	Relay output 7 state
OUTPUTS 8	Relay output 8 state
SAFE	Modbus communication loss
REMOTE	Server connection
DHCP	DHCP mode active
NORM	Normal operation mode
BOOT	Module is in Bootloader mode

Outputs

The relay output sections are shown on the image below. The COM contact is common for each group of 4 relays.

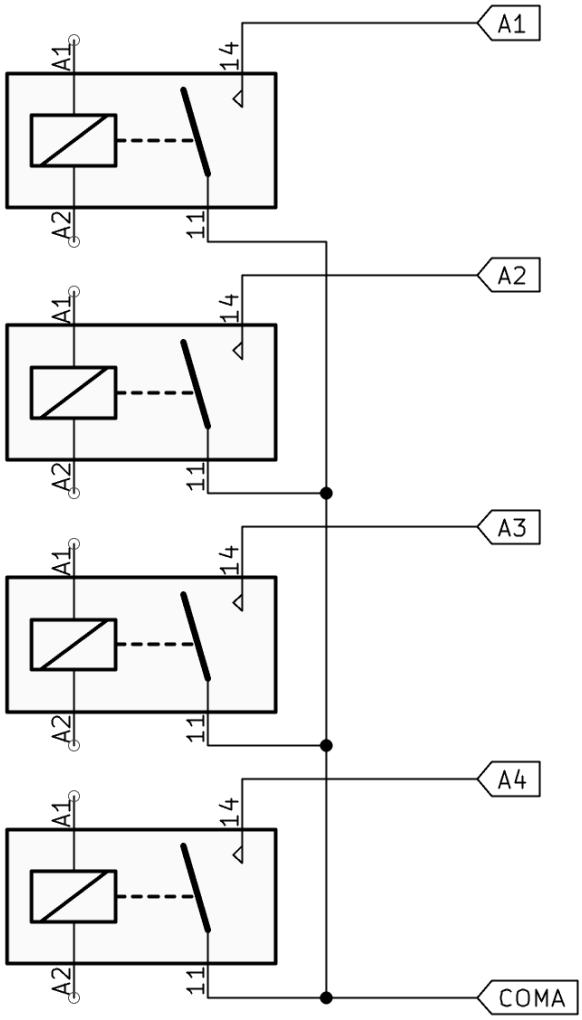

Module connectors

Upper section

Terminal number	Name	Description
1	COM A	Relays 1 ÷ 4 common contact
2	A1	Relay 1 NO contact
3	A2	Relay 2 NO contact
4	A3	Relay 3 NO contact
5	A4	Relay 4 NO contact
6	COM B	Relays 5 ÷ 8 common contact

7	B5	Relay 5 NO contact
8	B6	Relay 6 NO contact
9	B7	Relay 7 NO contact
10	B8	Relay 8 NO contact

Lower section

Terminal number	Name	Description
1 ÷ 2	Power	10-24V DC power supply input
3 ÷ 4	Pwr select	Power supply selection
5	Reset	Bootloader mode button (available only in emergency mode)
6 ÷ 9	LAN	LAN socket
16 ÷ 18	RS485	Unused

Information

The power can be applied to the DC connectors disregarding polarity. This will not damage the module.

Lantick PE-0-16

Technical characteristics

Parameter	Description
Power supply	**10-24V DC** (3,5mm screw terminals) **PoE IEEE 802.3af** via LAN port 1 **Passive PoE 10-24V DC** via LAN port 2
Power consumption	1 – 2W
Inputs	**Input type**: NO, with galvanic separation, pre-polarized NO/voltage **Input voltage:** 10-24V
Communication	Ethernet 10/100Mbps Full Duplex, RJ45 Built-in network switch for connecting other LAN devices

Dimensions

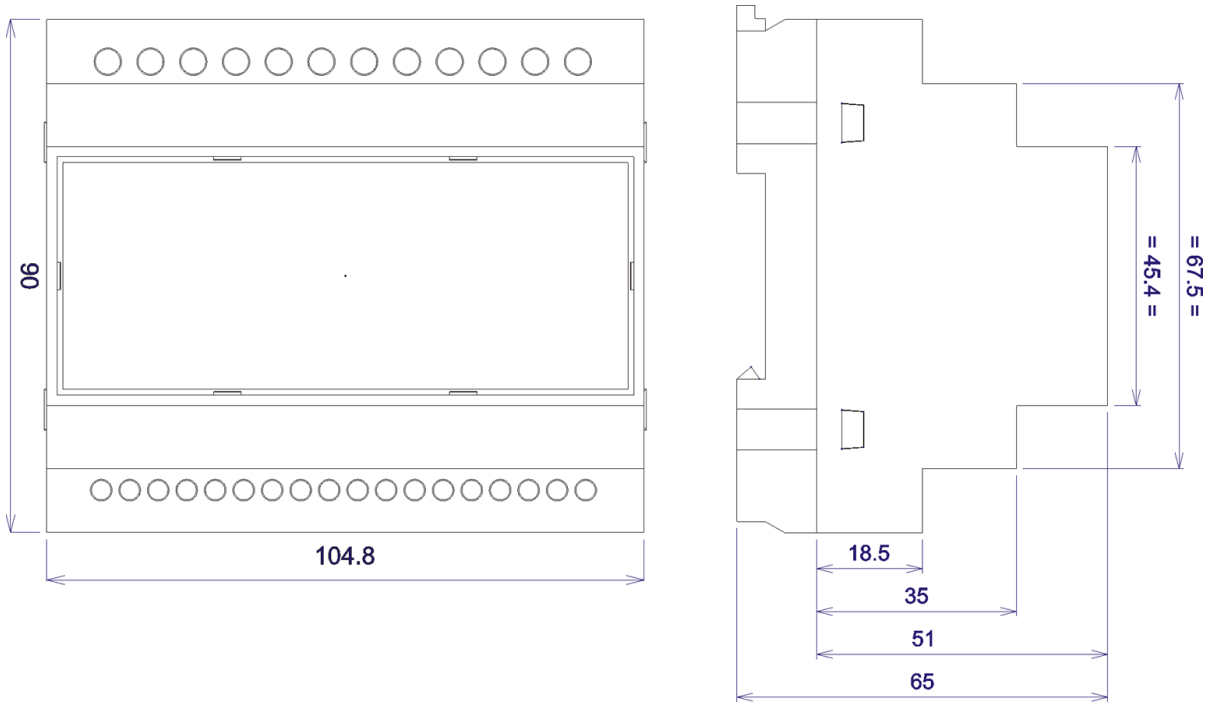

Information

All dimensions are in millimeters.

General view



Signaling

Name	Description
POWER	Module power supply
LINK	Active LAN connection
ACT	Active LAN connection
INPUTS 1	Input 1 state
INPUTS X	Input x state where x = 2 ÷ 16
SAFE	Modbus communication loss
REMOTE	Server connection
DHCP	DHCP mode active
NORM	Normal operation mode
BOOT	Module is in Bootloader mode

Inputs

Binary input schematics are shown on the image below.



Module connectors

Upper section

Terminal name	Description
COM A	Inputs common contact
I1	Input 1
Ix	Input x where x = 2 ÷ 16
I9	Input 9
Ix	Input x where x = 10 ÷ 16
COM B	Inputs common contact

Information

The COM A and COM B contacts are connected internally.

Lower section

Terminal name	Description
Power	10-24V DC power supply input
LAN 1	LAN socket – PoE 802.3af power supply
LAN 2	LAN socket – Passive PoE power supply
BOOT	Bootloader mode button (available only in emergency mode)

Information

The power can be applied to the DC connectors disregarding polarity. This will not damage the module.

Lantick PE-16-0

Technical characteristics

Parameter	Description
Power supply	**10-24V DC** (3,5mm screw terminals) **PoE IEEE 802.3af** via LAN port 1 **Passive PoE 10-24V DC** via LAN port 2
Power consumption	1 – 2W
Outputs	**Output type:** transistor **Output voltage:** 5-28VDC **Maximum operating current:** 1,7A per channel
Communication	Ethernet 10/100Mbps Full Duplex, RJ45 Built-in network switch for connecting other LAN devices
Weight	ca. 164g (5,8oz)

Dimensions

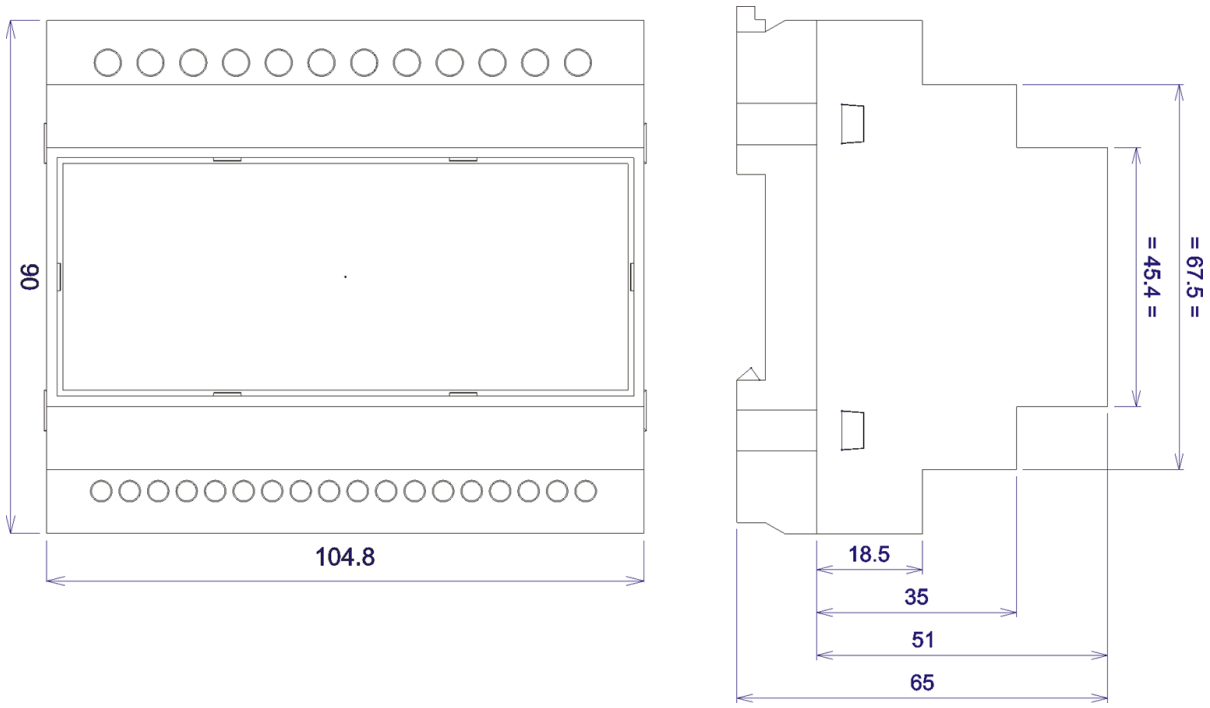

Information

All dimensions are in millimeters.

General view



Signaling

Name	Description
POWER	Module power supply
LINK	Active LAN connection
ACT	Active LAN connection
Q1	Output 1 state
Qx	Output x state where x = 2 ÷ 16
SAFE	Modbus communication loss
REMOTE	Server connection
DHCP	DHCP mode active
NORM	Normal operation mode
BOOT	Module is in Bootloader mode

Module connectors

Upper section

Terminal name	Description
VDC	Power + contact for outputs 1 ÷ 8
Q1	Output 1
Qx	Output x where x = 2 ÷ 8
GND	Common ground
VDC	Power + contact for outputs 9 ÷ 16
Q9	Output 9
Qx	Output x where x = 10 ÷ 16
GND	Common ground

Information

Both GND contacts are connected internally.

Lower section

Terminal name	Description
Power	10-24V DC power supply input
LAN 1	LAN socket – PoE 802.3af power supply
LAN 2	LAN socket – Passive PoE power supply
BOOT	Bootloader mode button (available only in emergency mode)

Information

The power can be applied to the DC connectors disregarding polarity. This will not damage the module.

Warning

LanTick PE-16-0's outputs must be connected so that the GND of the power supply, LanTick and the connected device is common.

Output connection examples

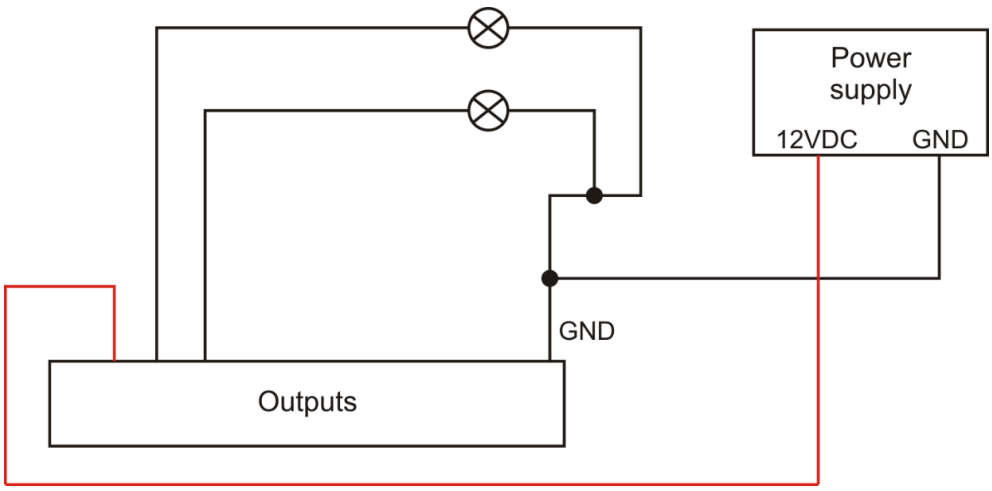

Tip

If NO (potential-free) outputs are needed, the use of an external relay is recommended.

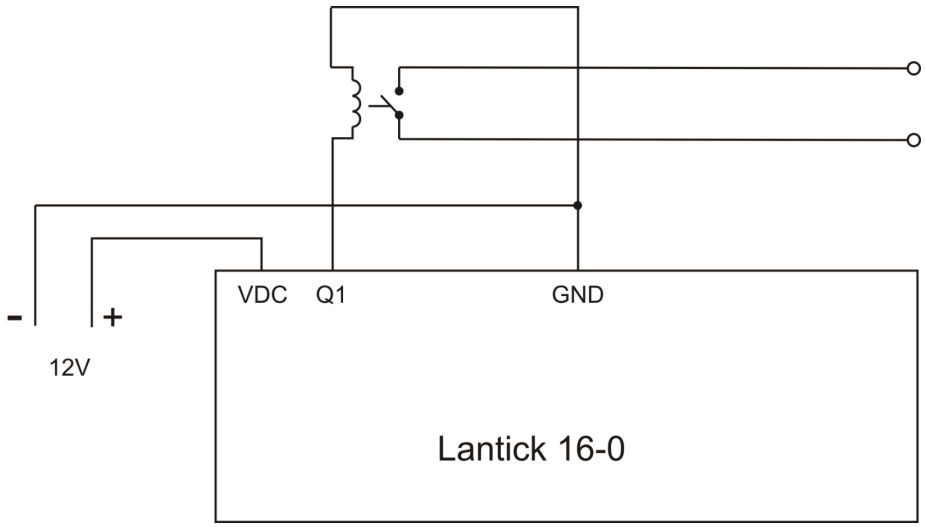

Network configuration

Changing the device's IP address - Discoverer programme

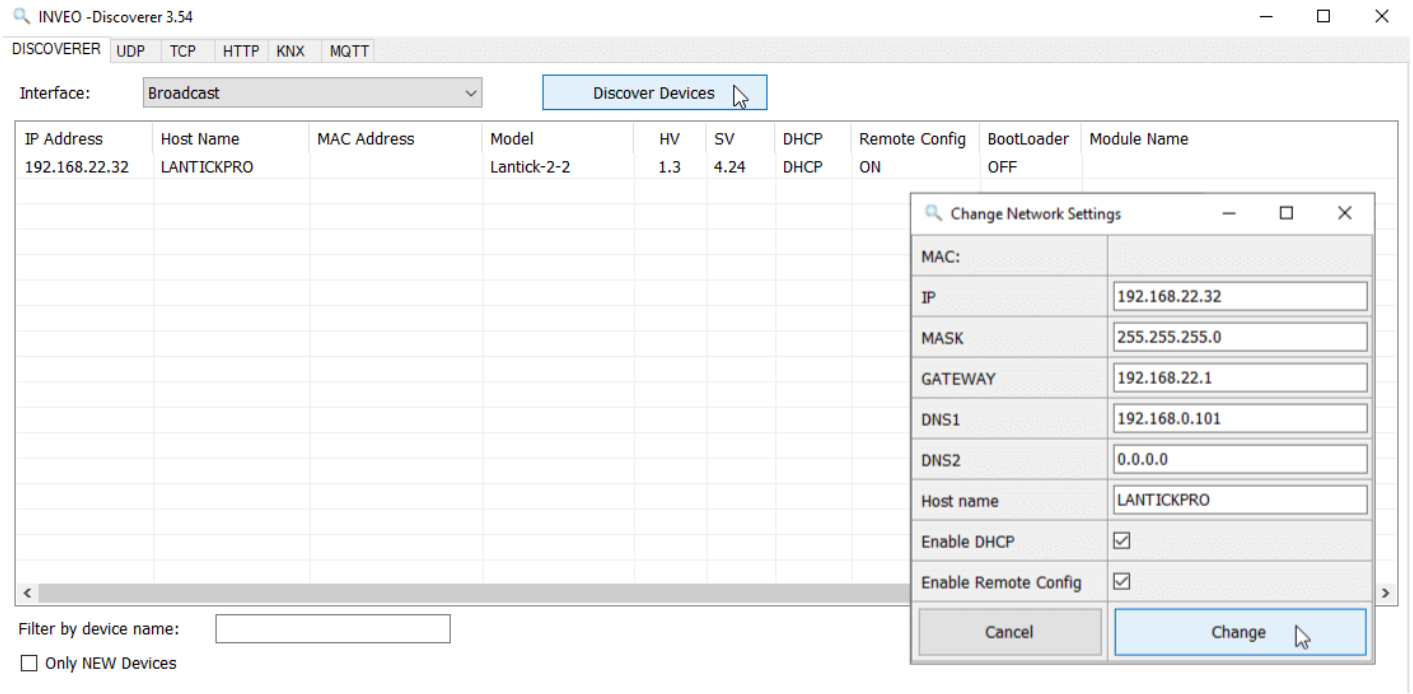

After running the **Discoverer** programme and searching for the appropriate device:
1. Right-click the device
2. Click the **Change** button.

After the dialogue window is opened you can:

- Set the IP address, mask, gateway, DNS1/DNS2.
- Change the Host name.

> **Note**
>
> **The device will be configured after the Change button is pressed.**

If **Remote Config** is enabled (enabled by default), the device needs to be configured by changing the computer's subnet:

To enable remote configuration:
1. Go to the **Administration** → **Services** tab.
2. Select **Enable Remote Network Config**.

Enable Remote Network Config	☑	Enable Remote Network Config by Inveo Discover Software

> **Tip**
>
> **After making changes, apply them using the Save button**

Changing the computer's subnet address for configuration

During configuration without **Discoverer** programme, it's needed to change the subnet address of the computer on the same network.

To access the computer's network configuration, do one of the following:

- Press **Win + R**, type in `ncpa.cpl`, and then press **Enter**.
- Alternatively, go to:
  Start → Control Panel → Network and Internet → Network and sharing center → Change adapter settings.

Then:
1. Select the network connection.
2. Right-click it and select **Properties**.
3. After selecting this option, network connection configuration screen will appear.

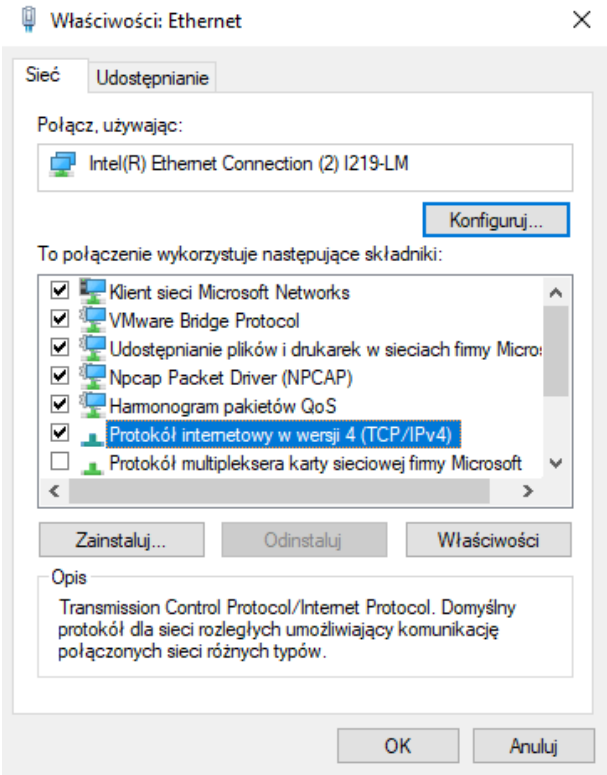

Select **Internet protocol version 4 (TCP/IPv4)** and type in the following parameters:

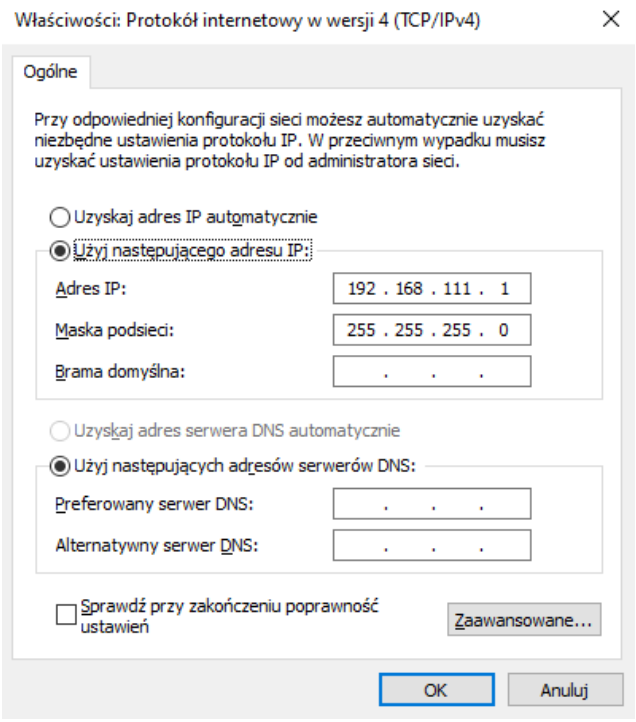

Note

After applying the configuration with OK, start a web browser and type in the following address: 192.168.111.15. (Default user and password: admin/admin00)

In the Network tab, LAN parameters can be changed.

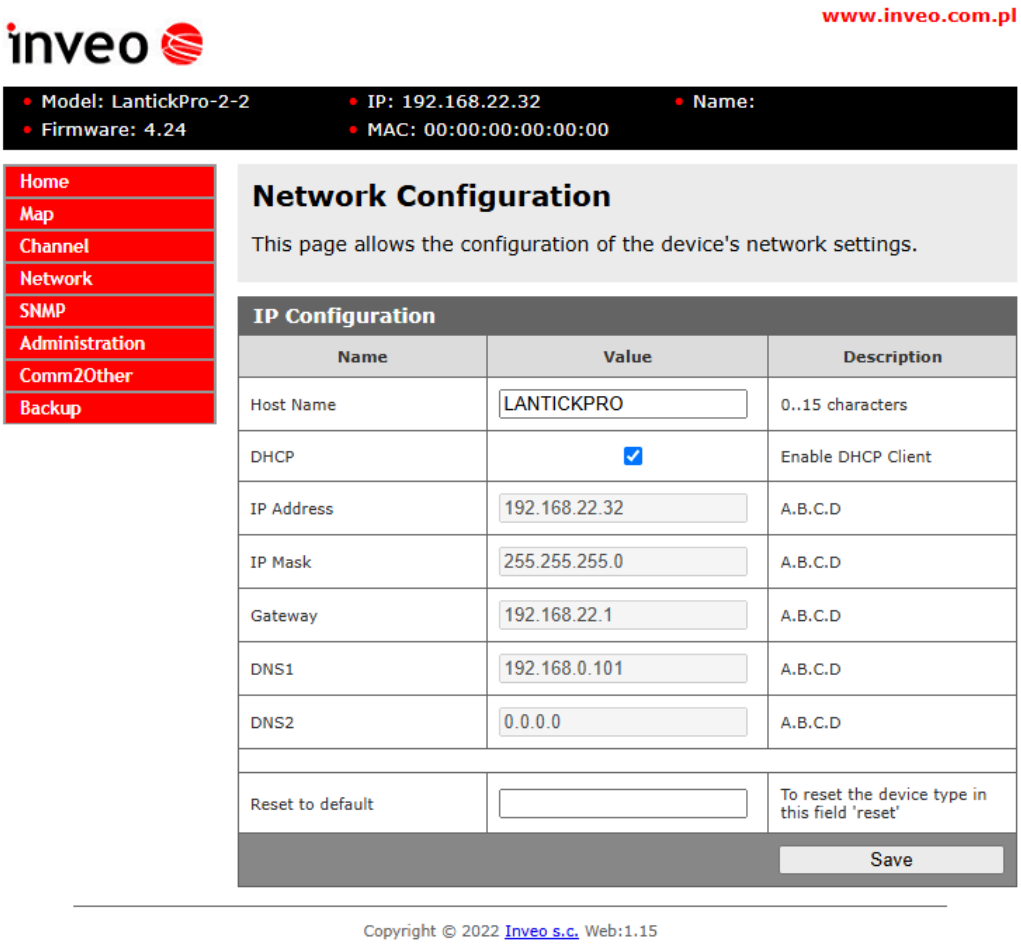

The following fields are used for network configuration:

- **Host Name** – NetBios name.
- **DHCP** – Enable the DHCP client; selecting this option forces the use of DHCP assigned IP address.
- **IP Address** – Module IP address.
- **IP Mask** – Subnet mask.
- **Gateway** – Network gateway.
- **DNS1, DNS2** – DNS addresses.
- **Reset to default** – Reset to default settings:
  - To restore the module to factory settings, type `reset` into the empty field and confirm using **Save**.

Tip

After making changes, apply them using the Save button

Communication with a module from an external network

> **Information**
>
> **If the module is located in a different LAN, port forwarding is required. Depending on the communication method utilized, contact with the network administrator and forwarding of certain ports is needed.**

WWW:

- Port: **TCP/UDP/IP 80**

KNX/IP protocol:

- Multicast address: **UDP 224.0.23.12**
- Port: **3671**

Computer programme or own application:

- Port: **TCP/UDP/IP 9761**

Modbus TCP:

- Port: **TCP/IP 502**

SNMP protocol:

- Port: **UDP 161**

Device functions

Device status

> **Note**
>
> **Device status is available on the website (default 192.168.111.15) after successful module login (default login: admin password: admin00). Basic parameters are visible on the main page.**

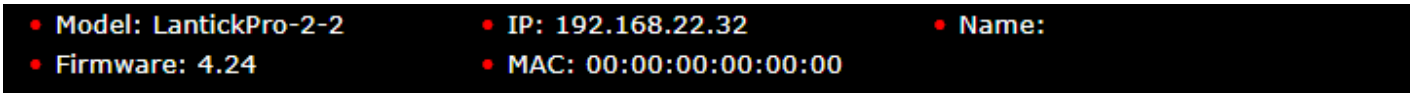

- **Model:** device type (eg. LantickPro-4-4)
- **Firmware:** installed module firmware revision
- **IP:** module IP address
- **MAC:** module MAC address
- **Name:** user-defined module name

Outputs table

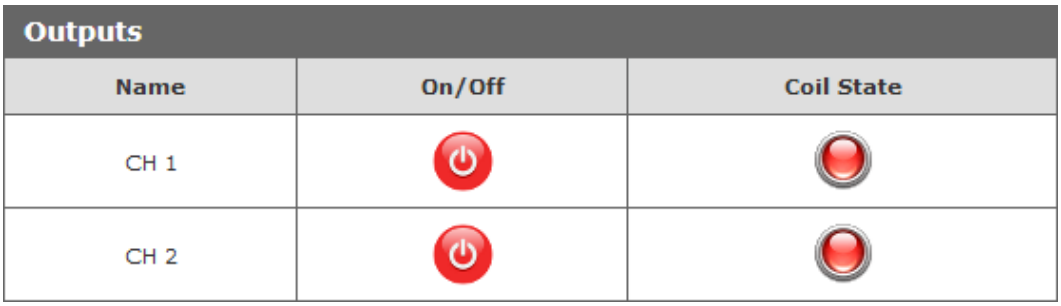

- **Name** – Channel name assigned by the user (default: CH1, CH2...),
- **On/Off** – Allows turning the output on or off by clicking the appropriate icon. The icon colour informs about the output state:
  - **red** – Output deactivated,
  - **green** – Output activated.
- **Coil State** – Relay state (active/inactive):
  - This state can be different from the **On/Off** column eg. in astable mode, where a channel is displayed as activated (**On/Off** green) but the relay is alternately on/off according to the **Time On** and **Time Off** settings.

Inputs table

Inputs			
Name	**In State**	**Counter**	**Action**
CH 5		0	-RESET-
CH 6		0	-RESET-

- **Name** – Channel name assigned by the user (default: CH1, CH2...),
- **In State** – Current input circuit state (red colour – input inactive, green colour – input active),
- **Counter** – Counter input state (applies to inputs; output state counting is described below),
- **Action** – Counter reset. Clicking **Reset** causes the appropriate counter to reset.

> **Tip**
>
> **The device status is available on the website:** `http://<IP_address>/stat.php` **or** `http://<IP_address>/status.xml`

```
<response>
    <prod_name>Lantick-1-1</prod_name>
    <user_name/>
    <out>0000000000000000</out>
    <on>0000000000000000</on>
    <in>0000000000000000</in>
    <counter1>3</counter1>
    <counter2>0</counter2>
    <counter3>0</counter3>
    <counter4>0</counter4>
    <counter5>0</counter5>
    <counter6>0</counter6>
    <counter7>0</counter7>
    <counter8>0</counter8>
    <counter9>0</counter9>
    <counter10>0</counter10>
    <counter11>0</counter11>
    <counter12>0</counter12>
    <counter13>0</counter13>
    <counter14>0</counter14>
    <counter15>0</counter15>
    <counter16>0</counter16>
    <insim/>
</response>
```

The above XML file informs about:

- `prod_name` – Product name,
- `out` – All outputs state,
- `on` – Output activation (in astable mode, periodic output activation and deactivation can be defined: in the **out** tag, one output state alternates - in the **on** tag, output activation is indicated as "1"),

- `in` – Inputs state,
- `counter[x]` – Counting input state (applies to both inputs and outputs),
- `insim` – Input simulation mode operation.

Information

Counter reset can be conducted from the browser by clicking the RESET button

Tip

For Lantick modules equipped with inputs and outputs, input numbers start with:
PE-2-2 x=3,4
PE-4-4 x=5,6,7,8

Visualizations

The device allows for presentation of input and output states on a user-defined background, enabling control of outputs and oversight of inputs on a graphic representation of a building.

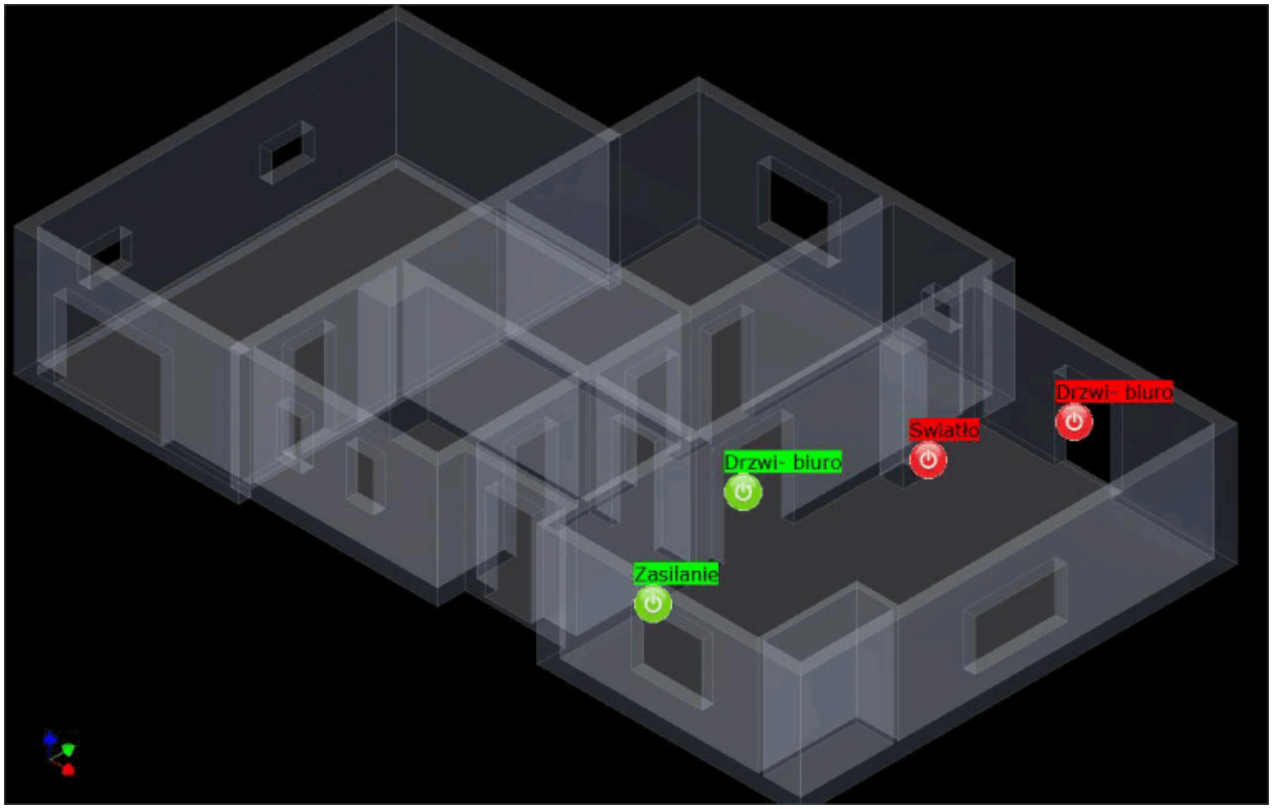

In the **Administration** tab, select the **Enable Graphic Mode Config** and confirm the selection with **Save**.

Enable Graphic Mode Config	☑	Enable coordinate graphics points config.

- Saving the settings allows change of background graphic and arrangement of input and output icons.
- The **Map** tab enables transition to graphic mode.

Background

To change the background:

1. Open the settings in the **Map** tab.
2. Click the **Browse** button to select an image file from the PC's hard drive.
3. Upload the file to device memory using **Upload JPG** (during the file loading process, the cursor will assume the form of an hourglass).
4. After uploading is complete, refresh the browser (**F5** key).



Tip

The device accepts JPG files.

After selecting the appropriate background, move the cursor to a selected icon, click and hold the left mouse button and move the icon to selected coordinates. **Save** the changes.

Clicking the output symbol causes its state to change. The background colour underneath the output symbol represents the relay contact position (green - closed, red - open).

Picture Mode

The device allows changing of the background depending on the state of selected channel.

For the background change to operate correctly, creation of one file divided into 2 pictures underneath each other is required. Lantick depending on the channel state displays the upper or lower half of the picture.

The **Picture Mode** field at the bottom of the **MAP** tab enables channel selection:

- **1 Picture** – single picture (displayed entirely),
- **2 Pictures – Select by Channel X** – selection of two picture mode switched by input or output No. X.

Tip

The Picture Mode can be used to display shutter operation. If an output is deactivated, the picture fragment featuring a closed shutter will be displayed. When the input is activated, the picture will be changed to feature an open shutter.

Warning

Deselect the EnableGraphic Mode Config option and apply selection using the Save button after changing the settings.

Output channel configuration

The device allows the user to change the output channel names and to set their operating mode. All settings are located in the **Channel** tab.

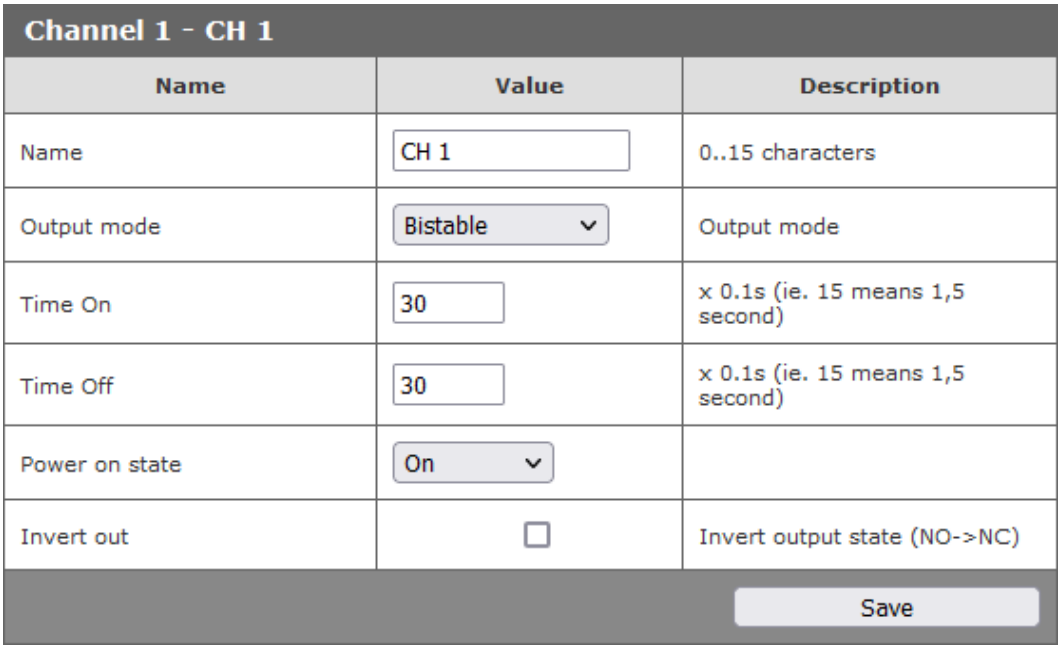

- **Name** – The user can assign a name to the channel (up to 15 characters),
- **Output mode** – Selected output channel operation mode selection:
  - **Disable** – Channel disabled, no activity,
  - **Bistable** – Bi-stable mode, the relay remains in one state (activated or deactivated),
  - **Astable** – Astable mode, the relay is activated and deactivated with defined time periods (**Time On** and **Time Off**),
  - **Time based** – Single trigger mode, the output is activated after the defined time period (**Time Off**) and remains active for the (**Time On**) time,
  - **Shutter** – Shutter control mode, groups two relays preventing simultaneous activation of both:
    - **Full move time** – Time needed to fully open/close the shutter,
    - **Half move time** – Time needed to open/close the shutter half way.
  - **Comm Monitor** – Test mode used for output operation monitoring.
- **Power on state** – Define output channel state after the device is restarted:
  - **Off** – Output channel disabled,
  - **On** – Output channel enabled,
  - **Last state** – The output channel assumes the state it had before the power was disconnected.
- **Invert out** – Output state inversion. Changes the output mode from NO to NC.

Tip

After making the changes, apply them using Save.

Input channel configuration

The input channels allow the user to change their names and to configure forwarding of their state to an external module.

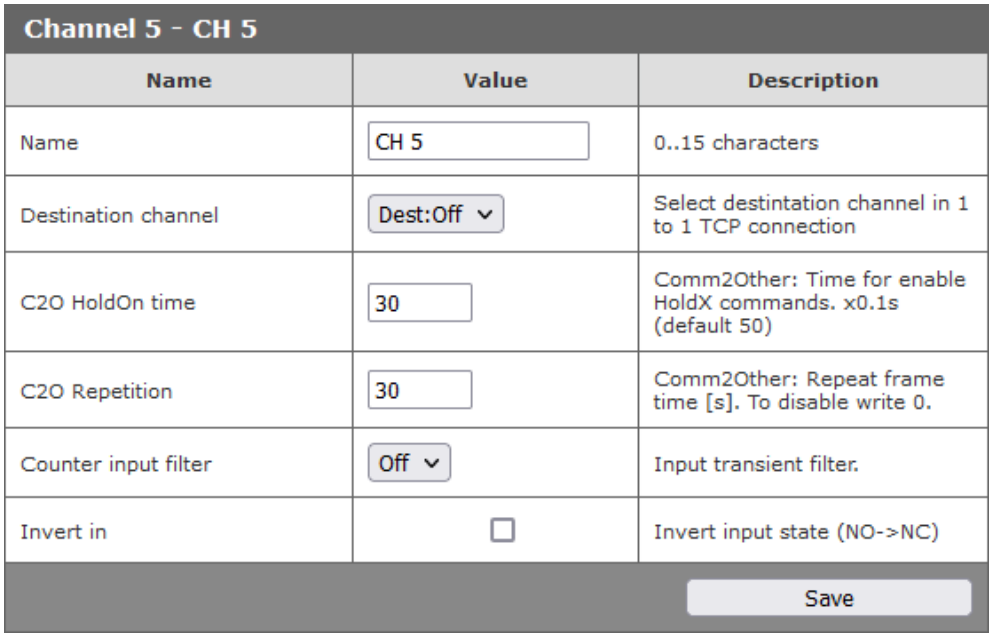

- **Name** – The user can assign a name to the channel (up to 15 characters).
- **Destination channel** – Channel number in the remote device that is to be activated. The output channel state will be reproduced in the input channel.
- **C2O HoldOn time** – Time after which the "HoldOn" event will be triggered for the Comm2Other service.
- **C2O Repetition** – The frequency the module will retry sending of the last triggered frame in the Comm2Other service with. For example, the "HoldOn" frame will be transferred periodically until a "HoldOff" frame that will resume the periodic sending appears.
- **Counter input filter** – Input signal filter. Can be used to eliminate interference.
- **Invert in** – Inversion of the input channel. Changes the input mode from NO to NC.

> **Tip**
>
> **After making the changes, apply them using Save.**

> **Tip**
>
> **The `names.xml` resource enables preview of input/output channel names.**

```
<response>
    <ch1>Wyłącznik 1</ch1>
    <ch2>Wyłącznik 2</ch2>
    <ch3>Lampa</ch3>
    <ch4>Wentylator</ch4>
    <ch5/>
    <ch6/>
    <ch7/>
    <ch8/>
    <ch9/>
    <ch10/>
    <ch11/>
    <ch12/>
    <ch13/>
    <ch14/>
    <ch15/>
    <ch16/>
    <prod>LantickPro-2-2</prod>
    <user>Test1</user>
</response>
```

The above XML file informs about:

- `ch` – User-defined name of the Lantick channel,
- `prod` – Device model,
- `user` – User-defined module name

Input simulation mode

For control system operation testing, the input simulation mode can be used. To enable this mode, type in the following address into the web browser: `http://<IP_address>/stat.php?insim=1`.

In the simulation mode, it's possible to activate inputs with a click on the input icon. The input will remain active as long as left mouse button is held down.

To **disable** simulation mode, type in the following address into the web browser: `http://<IP_address>/stat.php?insim=0`.

Inputs ! SIMULATE !

Name	In State	Counter	Action
CH 1		11	-RESET-
CH 2		6	-RESET-
CH 3		2	-RESET-

SNMP server configuration

The module is equipped with an SNMP v2c server. Enabling this function is possible in **Administration** → **Services** → **Enable SNMP**. The SNMP protocol allows downloading and setting output states and downloading of input states.

> **Tip**
>
> **The MIB file describing the structure is available to download in the SNMP Download MIB file tab.**

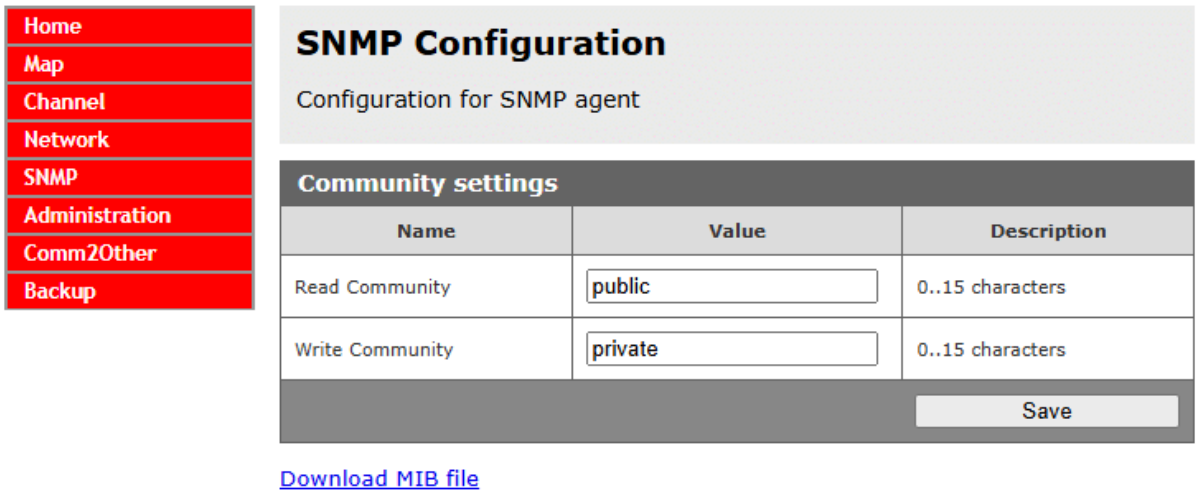

To use the SNMP protocol, it's required to save the MIB file using the right mouse button, clicking the **Download MIB file** link and selecting the **Save link** as option. Next, use the appropriate program, e.g. MIB Browser. After starting the program, it is required to upload the downloaded MIB file.

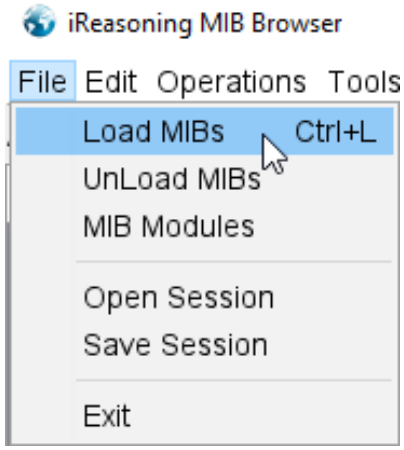

The next step is to input the device's IP address (Default IP: 192.168.111.15) and select an appropriate operation. The **OID** field can be left blank for the program to display all table contents.



Input, output, counter states and general information about the Lantick module are displayed in the table. To preview an element from the MIB tree table, double click it. On the left side of the programme's window an access path will be displayed.

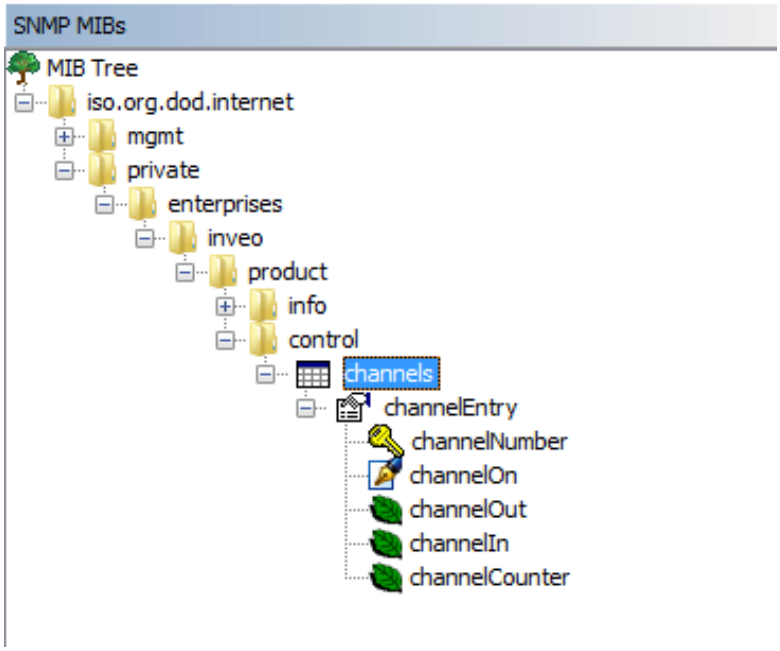

OID structure in the MIB tree

Each element in the MIB (Management Information Base) has an unique **OID** (Object Identifier) number assigned. OID is the path identifying the given element in the structure made by numbers separated by dots. This is an OID structure example:

Basic OID example:

- **OID**: `iso.org.dod.internet` → `.1.3.6.1`

The following digits in the OID define **subfolders** in the MIB tree structure. This is an OID structure example for particular folders and functions:

OID examples for folders:

- **Folder** `inveo`: `.1.3.6.1.4.1.42814`
- **Folder** `Lantick`: `.1.3.6.1.4.1.42814.28`
- **Folder** `control`: `.1.3.6.1.4.1.42814.28.3`
- **Folder** `channels`: `.1.3.6.1.4.1.42814.28.3.1`

OID examples for channels:

- **Channel input**: `.1.3.6.1.4.1.42814.28.3.1.1`

OID functions

- Last OID digits define the functions assigned to a given channel: Function examples:
- **Output activation/deactivation:**
- OID: `.1.3.6.1.4.1.42814.28.3.1.1.2.x`
- Where `x` is the output number (number starting with 0)
- **Coil status control:**
- OID: `.1.3.6.1.4.1.42814.28.3.1.1.3.x`

- Where `x` is the output number (number starting with 0)
- **Checking the input state:**
- OID: `.1.3.6.1.4.1.42814.28.3.1.1.4.x`
- Where `x` is the input number (number starting with 0)
- **Checking the counter input:**
- OID: `.1.3.6.1.4.1.42814.28.3.1.1.5.x`
- Where `x` is the input number (number starting with 0)

To activate the output No. 2, advanced settings configuration is required. To do that, press the **Advanced** button located next to the device's IP address.

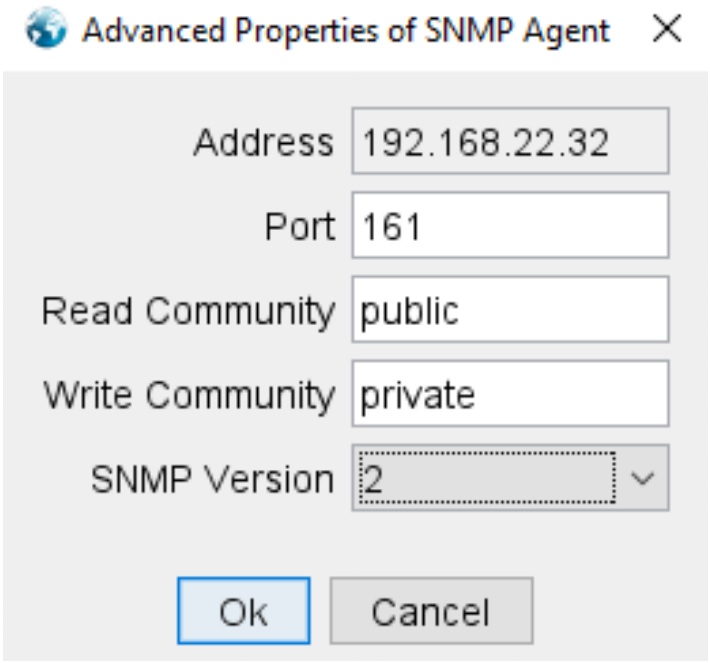

Tip

Read Community and Write Community fields should be filled with values from the SNMP tab.

Read Community	public
Write Community	private

After the above steps are complete, output No. 2 can be set as enabled. The channelOn.1 (1 because the inputs are numbered starting from 0) should be selected and the **Set** button should be right-clicked.

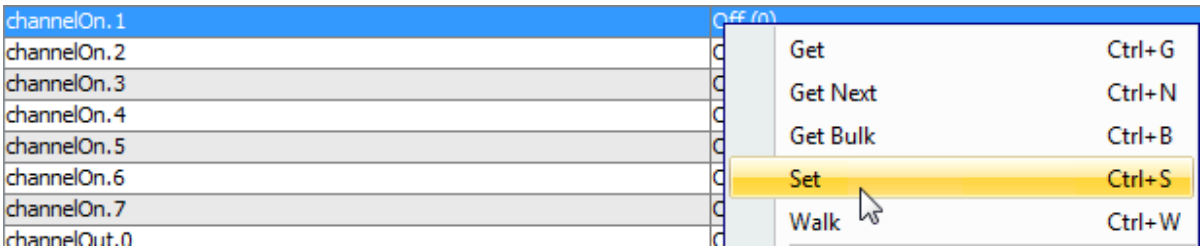

The next step is to input the value of 1 into the **Value** field, and accept with **OK**.

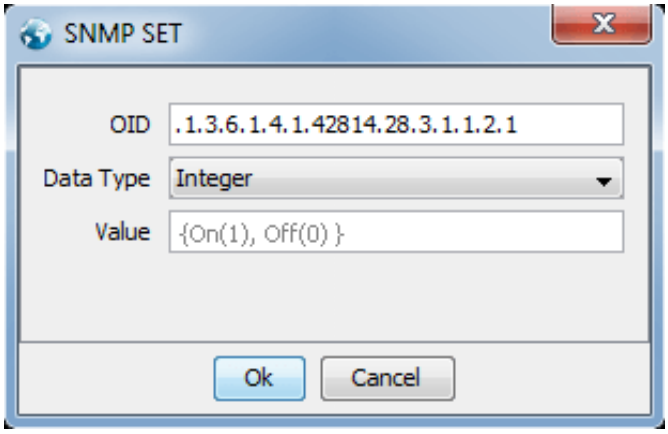

Communication protocols and administration

The **Administration** menu allows the user to configure services that are to be enabled/disabled in the device and to change the access password.

Module name

Each module can have a unique name assigned for identification.

Module name		
Name	**Value**	**Description**
Module name		0..15 characters

Changing the password

To change the password, input the current password into the **Current Password** field. Input your new password into the **New Password** and **Re-type Password** fields and save using **Save Config**.

User Password		
Name	**Value**	**Description**
New Password		0..15 characters
Re-type Password		0..15 characters

Admin Password		
Name	**Value**	**Description**
Current Password		0..15 characters
New Password		0..15 characters
Re-type password		0..15 characters

User Password

User password change (access only to the home page) (**Username**: `user`):

- **New Password** – new password,
- **Re-type Password** – new password confirmation.

Admin Password

Administrator password change (access to all settings) (**Username**: `admin`):

- **Current Password**,
- **New Password**,
- **Re-type Password**.

Services settings

The device allows selection of what services should available. Selecting the field next to the name of the service and pressing of the **Save** button activates the selected service.

Services		
Name	**Value**	**Description**
Enable User Password	☑	
Enable Admin Password	☑	
Enable Program Access	☑	Needed by TCPrel and 1 to 1 TCP connection (Destination Client).
Enable MODBUS TCP Server	☑	
Enable SNMP	☑	
Enable Destination Client	☑	Allow module to send data to other device (1 to 1 TCP connection)
Enable Comm2Other Module	☑	Enable Multicast P2P communication. Lantick must be restarted after change.
Enable Inveo Dashboard	☐	Enable control by Inveo Dashboard Website. Click here for additional info.
Enable TFTP Bootloader	☐	Allow remote upgrade firmware by TFTP. For safety reasons, the option should be disabled.
Enable Remote Network Config	☑	Enable Remote Network Config by Inveo Discover Software
Enable Graphic Mode Config	☑	Enable coordinate graphics points config.
LED Status 1:	Off	
LED Status 2:	Off	

- **Enable User Password**
- **Enable Admin Password**
- **Enable Program Access** – enable access by external programs,

- **Enable Modbus TCP Server**
- **Enable SNMP** – enable SNMP agent,
- **Enable Destination Client** – the service for forwarding the input/output states to other modules (bridge mode),
- **Enable Comm2Other Module** – enable communication on the multicast address (224.0.23.12:3671),
- **Enable Inveo Dashboard** – cloud control service http://dash.inveo.com.pl,
- **Enable TFTP Bootloader**
- **Enable Remote Network Config** – (**Discoverer** programme),
- **Enable Graphic Mode Config** – configuration of graphic mode from the **Map** menu,
- **Disable LED** – disables LED indicators on the module. If the reset button is pressed, the indicators will glow for 5 minutes and then shut off *(Lantick PE-4-4, PE-0-8, PE-8-0, PE-0-16, PE-16-0)*,
- **LED Status 1/2** – allows the user to select a channel, the front-panel **Status** LED will represent the state of *(Lantick PE-2-2, PE-0-4)*.

Warning!

TFTP Bootloader should be disabled during normal operation. The setting should only be enabled before firmware update.

Communication protocols

The device supports the following control methods:

- Built-in www page,
- KNX/IP protocol,
- Inveo Dashboard access service http://dash.inveo.com.pl,
- SNMP,
- Modbus TCP,
- HTTP,
- Windows command line programme,
- Linux programme,
- Android smartphone/tablet (e.g. HTTP Shortcuts app – set the HTTP request that uses dash.inveo.com.pl and sends the command to Lantick).

The devices can be connected to a network, allowing for creation of advanced control systems. "All to all" communication settings can be changed in the **Comm2Other** tab. The modules are equipped with tools that simplify module-to-module communication. The following protocols can be used:

- TCP,
- UDP,
- KNX,
- HTTP GET.

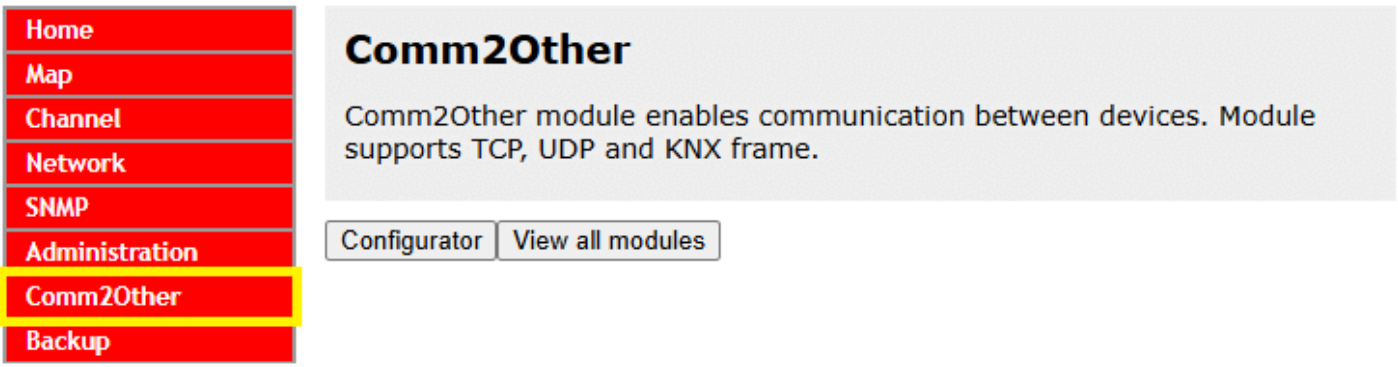

Comm2Other – KNX

The Lantick supports a protocol compatible with KNX-IP in Routing mode. The protocols is designed to control home ("smart homes") and office automation.

The network is built around the all-to-all principle without a Master device, even though it is possible to specify one for more extensive installations. Failure of one module does not render the entire network unoperational. Communication between modules is carried out via LAN using UDP multicast broadcast packets.

Configuration and operation are based on the principle that the receiving devices (e.g. relays connected to lamp circuits, shutters) and triggers (inputs) are assigned to a common group. Each input channel has an assigned address and command. The output channel can react (on, off, invert state, activate with a delay, shutter) to specified groups. When an input sends the command to the defined group address, all receivers that have the group assigned will react. Each input/output can have several addresses assigned. The inputs can send various events to the address such as: pressing, holding, release of a button. Additionally, they can send a pre-defined TCP, UDP or HTTP frame. Outputs can be connected in sections to control shutters. The system can be expanded with a central unit for building visualisastion and remote control.

All KNX devices preview

The **View all modules** function is useful for configuring extensive systems. This function scans the LAN, detects all Inveo devices that have KNX protocol activated and fills a table with them.

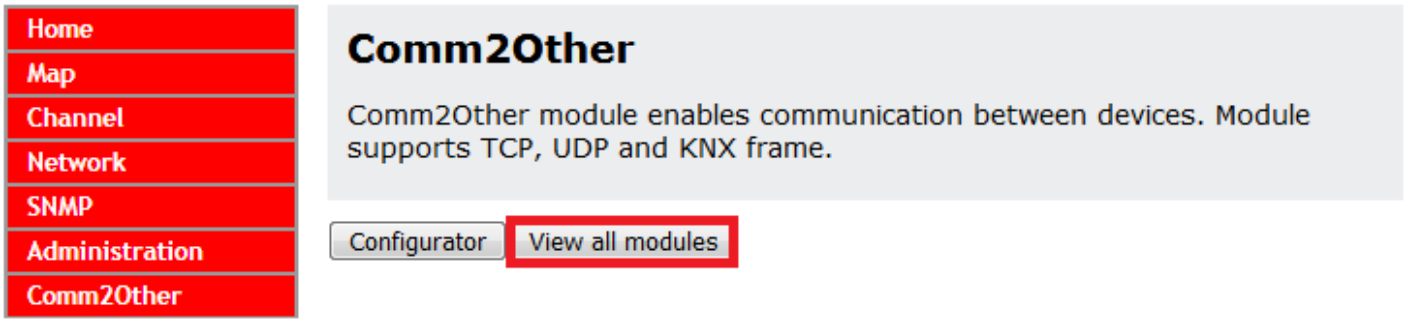

Frame format converter

Clicking the **Configurator** button in **Comm2Other** opens a KNX service configuration window. The following buttons are located in the upper-right corner of the tab.

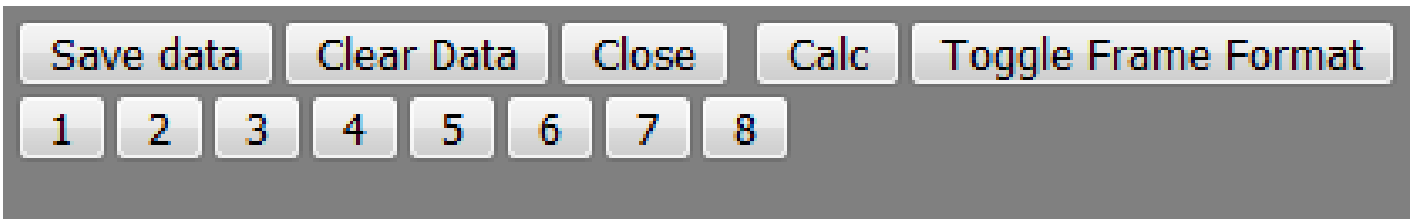

- **Save data** – The process takes around 10 seconds to complete,
- **Clear data** – Clear current settings,
- **Close** – Close the configuration window,
- **Toggle Frame Format** – Toggle between ASCII and HEX representation,
- **1, 2, 3, 4, 5, 6, 7, 8** – Navigation buttons, open the view of the selected input/output,

- **Calc** – Decimal to HEX time format calculator.

Example

Using the calculator, we can calculate 5 seconds to HEX format. Because the scale is 0,1s, 5 seconds is 50 units (50*0,1=5). To write this value in 2-bit HEX format, type `\x00\x32` into the frame.

Input data format

Data entered into the frame must have the `\xAB` format, where:

- `AB` – Value in HEX, representing a KNX command

This specifies which values are interpreted by the system, making KNX protocol support effective.

Controlling the output channels

In this table, basic (DPT 1.xxxx) or priority (DPT 2.xxxx) functions can be used.

Channel Out 1 [CH 1] ?

ReadState: 31/7/255

Function	Group 1	Group 2	Group 3	Group 4
On (DPT 1.001)	1/2/3	0/0/0	0/0/0	0/0/0
Off (DPT 1)	0/0/0	0/0/0	0/0/0	0/0/0
Invert (DPT 1.012)	0/0/0	0/0/0	0/0/0	0/0/0
Time	0/0/0	0/0/0	0/0/0	0/0/0
On Control (DPT 2.001)	0/0/0	0/0/0	0/0/0	0/0/0
Off Control (DPT 2)	0/0/0	0/0/0	0/0/0	0/0/0
Invert Control (DPT 2.012)	0/0/0	0/0/0	0/0/0	0/0/0
Scene Control (DPT 18.001)	0/0/0	0/0/0	0/0/0	0/0/0

Using the priority function (DPT 2.xxxx) locks the basic functions.

This is useful for example:

- During a fire – All shutters open and can not be closed,
- When a light is switched on and we do not want anyone to turn it off.

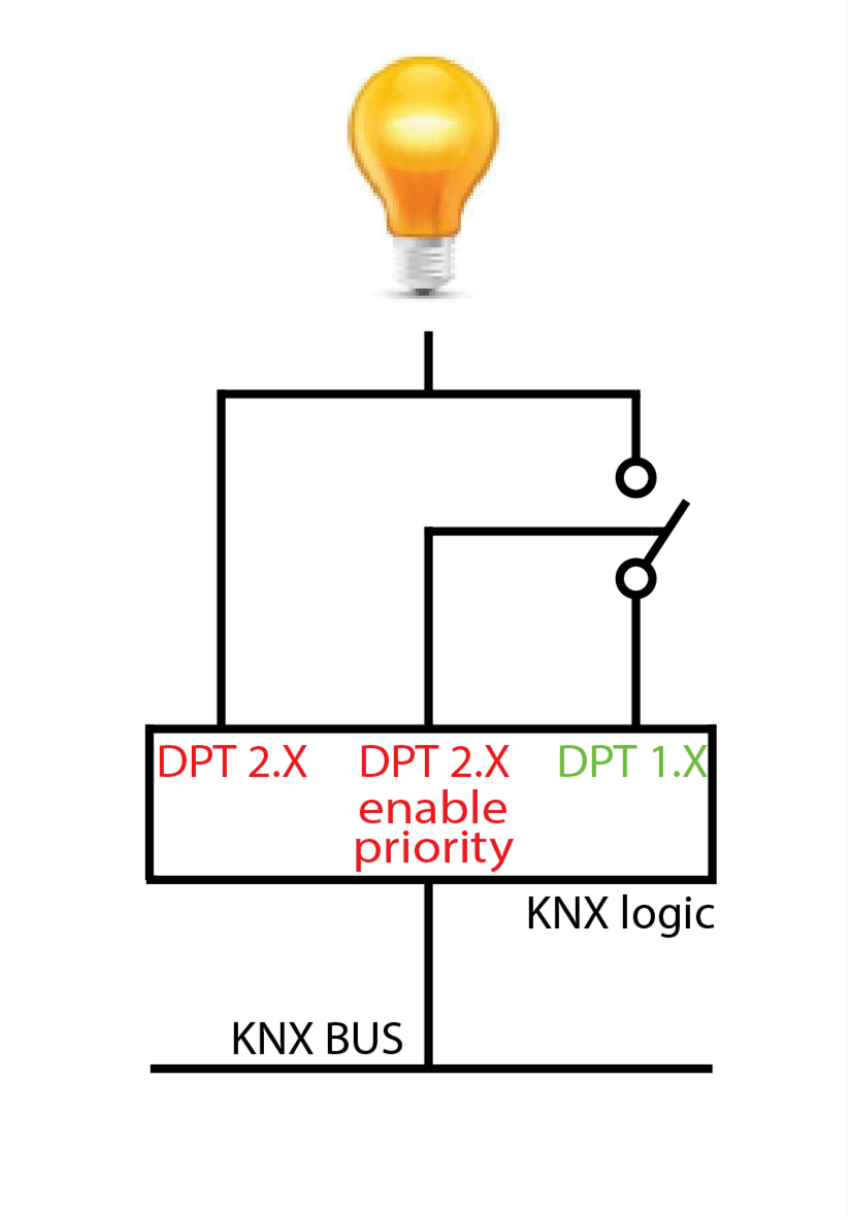

KNX commands

- **ReadState** – Address allowing for readout of module state (e.g. by an external program). Assumes values `0-31/0-7/0-255`,
- **On (DPT 1.001)** – Output activation – can assume 2 values:
  - `\x00` – Output deactivation,
  - `\x01` – Output activation.
- **Off (DPT 1)** – Function opposite to **On (DPT 1.001)**. Used when the deactivation of one device should cause the activation of another one.
- **Invert (DPT 1.012)** – Output state invert:
  - `\x00` – This command will NOT cause the outputs state to be inverted,
  - `\x01` – Output state inversion.
- **Time** – Timed output activation/deactivation:
  - `\x00` – Relay deactivation,

- `\x01` – **TonMSB TonLSB ToffMSB ToffLSB** – Activation of relay for the defined time period after a delay. This time is in 0,1 second units in HEX format.

Example

Activate the relay for 60 seconds (value 600), after an 8 second delay (value 80):
- dec 600 hex 0x02 0x58
- dec 80 hex 0x00 0x50

Syntax:

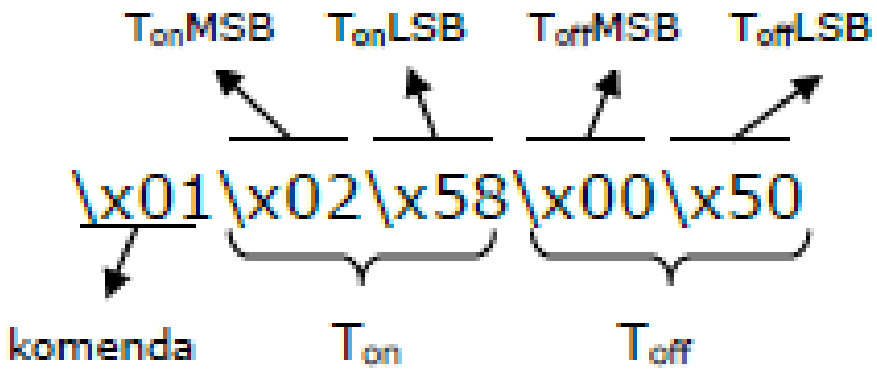

Tip

To program relay activation without a delay, do not input a value for Toff, e.g.: `\x01\x02\x58`.

- **On Control (DPT 2.001)** – Output activation with priority – can assume 4 values:
  - `\x00` – Output deactivation – functions like **On (DPT 1.001)**,
  - `\x01` – Output activation – functions like **On (DPT 1.001)**,
  - `\x02` – Sending this command will deactivate the output with priority – the output can be unlocked (lock flag deleted) by sending `\x00` or `\x01`. The output can be deactivated with `\x03` or manually (the lock flag will still remain active),
  - `\x03` – Output activation with priority – the output can be unlocked (lock flag deleted) by sending `\x00` or `\x01`. The output can be deactivated with `\x02` or manually (the lock flag will still remain active),
- **Off Control (DPT 2.001)** – Function opposite to **On Control (DPT 2.001)** with priority.
- **Invert (DPT 2.012)** – Output state inversion with priority, assumes 4 values:
  - `\x00` – This command will NOT cause the outputs state to be inverted,
  - `\x01` – Output state inversion,
  - `\x02` – Sending this command will lock the output in its current state with priority. The output can be unlocked (lock flag deleted) only by sending `\x00` or `\x01`,
  - `\x03` – State inversion with priority – The output can be unlocked (lock flag deleted) only by sending `\x00` or `\x01`.

- **Scene Control (DPT 18.001)** – Store the current scene settings, e.g. outputs 1 and 3 activated, 2 deactivated, 4 – unspecified.

Store outputs 1, 2 and 3 to group 1/1/1 (type 1/1/1 into **Scene control**).

Scene write/read command: `\xab`, where:

- a:
  - Value of „0” activates the scene from device memory,
  - „8” writes the current scene to the device's memory.
- b: subsequent scene numbers, max 16. Assume the values 0-F.

Example

`\x82` – Write scene No. 3,
`\x0A` – Read scene No. 11.

Scene Control is used for frequently used settings, e.g. after a work day, power to all workstations is to be cut – all outputs deactivated; in one room at 5:55, the ceiling, wall lights and PC power should be switched on.

Up to 4 different groups can be assigned to each output channel (**Group 1-4** table columns). The output channel will respond with a defined command to each of the assigned groups.

KNX commands for channel configuration in shutter/gate mode

- **Step (DPT 1.007)** – Increase/decrease the shutter opening by a step:
  - `\x00` – Up,
  - `\x01` – Down.
- **Up/Down (DPT 1.008)** – Open/close the shutter:
  - `\x00` – Open the shutter entirely. Sending this command again will not cause the shutter to stop,
  - `\x01` – Close the shutter entirely. Sending this command again will not cause the shutter to stop.
- **Stop (DPT 1)** – Stop the shutter:
  - `\x00` – Shutter stop,
  - `\x01` – Shutter stop.
- **Up/Down with Stop (DPT 1)** – Open/close the shutter with the ability to stop it – if the command is set once, the shutter will start to open/close, sending the command again will cause it to stop:
  - `\x00` – Shutter open/stop,
  - `\x01` – Shutter close/stop.
- **Gate (DPT 1)** – Open/close/stop the shutter alternately. Sending the command again will deactivate the output, stopping the shutter:
  - `\x00` – Shutter stop,
  - `\x01` – Shutter open/stop/close.

- **Step Control (DPT 2.007)** – **Step (DPT 1.007)** function with priotity. Increase/decrease the shutter opening by a step:
  - `\x00` – Up,
  - `\x01` – Down,
  - `\x02` – Up with priority (DPT1.X control locked),
  - `\x03` – Down with priority (DPT1.X control locked).

Output can be unlocked (lock flag removed) only by sending `\x00` or `\x01`.

- **Up/Down Control (DPT 2.008)** – **Up/Down (DPT 1.008)** function with priority. Open/close the shutter:
  - `\x00` – Open the shutter entirely. Sending this command again will not cause the shutter to stop,
  - `\x01` – Close the shutter entirely. Sending this command again will not cause the shutter to stop,
  - `\x02` – Open the shutter entirely with priority. (DPT1.X control locked),
  - `\x03` – Close the shutter entirely with priority. (DPT1.X control locked).

Output can be unlocked (lock flag removed) only by sending `\x00` or `\x01`.

- **Stop Control (DPT 2)** – **Stop (DPT 1)** with priority – stops the shutter:
  - `\x00` – Shutter stop,
  - `\x01` – Shutter stop,
  - `\x00` – Shutter stop with priority (DPT1.X control locked),
  - `\x01` – Shutter stop with priority (DPT1.X control locked).

Output can be unlocked (lock flag removed) only by sending `\x00` or `\x01`.

- **Up/Down with Stop Ctrl (DPT 2)** – **Up/Down with Stop (DPT 1)** with priority. Open/close the shutter with the ability to stop it – if the command is set once, the shutter will start to open/close, sending the command again will cause it to stop:
  - `\x00` – Shutter open/stop,
  - `\x01` – Shutter close/stop,
  - `\x02` – Shutter open/stop with priority (DPT1.X control locked),
  - `\x03` – Shutter close/stop with priority (DPT1.X control locked).

Output can be unlocked (lock flag removed) only by sending `\x00` or `\x01`.

- **Gate Control (DPT 2)** – **Gate (DPT 1)** with priority. Open/close/stop the shutter alternately. Sending the command again will deactivate the output, stopping the shutter:
  - `\x00` – Shutter stop,
  - `\x01` – Shutter open/stop/close – Sending the command again while the shutter is moving, will deactivate the output, stopping it,
  - `\x02` – Shutter stop with priority (DPT1.X control locked),
  - `\x03` – Shutter open/stop/close with priority (DPT1.X control locked).

Output can be unlocked (lock flag removed) only by sending `\x00` or `\x01`.

- **Blind Control (DPT 3.008)** – Open/close/stop the blind:
  - `\x00` – Blind stop,
  - `\x07` – Blind open,
  - `\x0F` – Blind close.
- **Percentage 0-100% (DPT 5.001)** – Percentage opening of the shutter. To open the shutter half-way, write 50 in HEX: 50dec = 32hex.
  - `\xCC` – Percentage opening of the shutter, where CC is % in HEX.
- **Value 0-255 (DPT 5.004)** – 0-255 opening of the shutter: 0 - shutter closed, 255 - shutter open entirely. To open the shutter to around 70%, calculate the 70% of 255 = 178,5 and convert it to HEX rounding down: 178dec=B2hex.
  - `\xCC` – 0-255 opening of the shutter (0-100%), CC in HEX.
- **Scene Control (DPT 18.001)** – Store the current scene settings.

Store the shutters 1, 2, 3 settings to group 1/1/1 (1/1/1 in **Scene control**).

Scene write/read command: `\xab`, where:

- a: value of „0” activates the scene from device memory, „8” writes the current scene to the device's memory,
- b: subsequent scene numbers, max 16. Assume the values 0-F.

Example

`\x82` – Write scene No. 3,
`\x0A` – Read scene No. 11.

Configuration of triggers – Input channels

Channel In 4 [CH 4] ?

ReadState: 31/7/255

Function	Protocol	IP	Port	KNX Group	Frame	Try!
On 0	Disable	0.0.0.0	0	0/0/0		Try!
Function	**Protocol**	**IP**	**Port**	**KNX Group**	**Frame**	**Try!**
Off 0	Disable	0.0.0.0	0	0/0/0		Try!
Function	**Protocol**	**IP**	**Port**	**KNX Group**	**Frame**	**Try!**
Hold On 0	Disable	0.0.0.0	0	0/0/0		Try!
Function	**Protocol**	**IP**	**Port**	**KNX Group**	**Frame**	**Try!**
Hold Off 0	Disable	0.0.0.0	0	0/0/0		Try!

- **ReadState** – State read address (e.g. by an external program). Assumes values 0-31/0-7/0-255,

The timing of sending the frame depends on the assigned function:

- **On 0** – Detects the rising edge (will be recalled when a high state is present at the input),
- **Off 0** – Detects the falling edge only if the high state persisted for less than **C2O Hold On Time** (recalled after the input voltage disappears, after a button is released),
- **Hold On 0** – Reacts to a high state on the input, only if it persisted for **C2O Hold On time** defined in the **Channel** tab,
- **Hold Off 0** – Reacts to a low state on the input, only if it persisted for at least **C2O Hold On Time**.

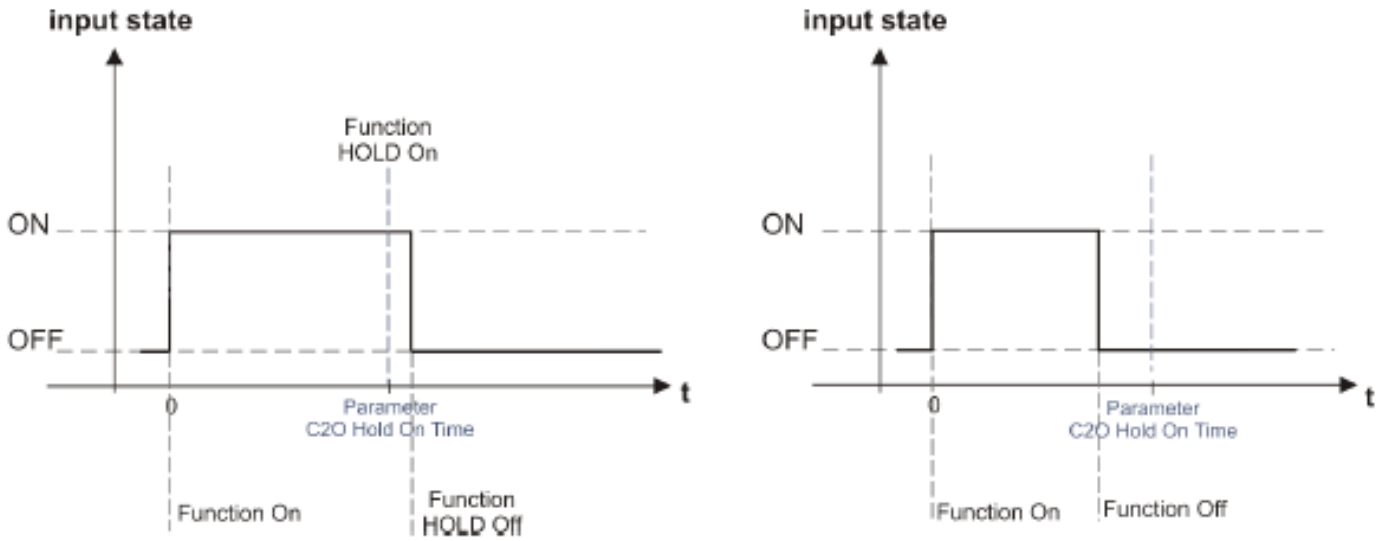

Recall of a specified function is dependent on the input pulse length. The input pulse recalls the event saved as On. If the pulse persists for a time longer than the **C2O Hold On time** – the **Hold On** function is recalled. If the pulse stops before **C2O Hold On time** passes, the Off function is recalled. If the pulse stops after **C2O Hold On time** passes – action **Hold Off** will be recalled.

The aforementioned functions can send the frames periodically depending upon the **C2O Repetition time**. The device can send the last triggered frame periodically, e.g. **HoldOn** can be sent with the specified frequency until a **HoldOff** frame appears (that will be sent periodically too).

Example

Lantick PE-0-8: A monostable wall switch is connected to the input 1 (channel 1), on which the **Hold On 0** function is assigned to the group 1/1/2, while **Off 0** is assigned to 1/1/1.
LanTick PE-8-0: Output 3 is defined as a shutter in a guest room and output 5 as the lighting. Output 3 is assigned to group 1/1/2 with the **Up/Down Control** function, alternately opening/closing the shutter. Output 5 is assigned to group 1/1/1 with the **Invert** function.

This configuration operates as follows:
Short press of the switch activates/deactivates the lighting in the guest room. Holding the switch for a brief moment opens/closes the shutter in this room.

Protocol column

The following settings can be selected:

- **Disable** – Control disabled,
- **TCP** – TCP control,
- **UDP** – UDP – multicast control,
- **KNX** – KNX protocol,
- **HTTP GET** – HTTP GET control.

IP column

Input the IP address of the target device.

Port column

Input 80 if using HTTP GET. For TCP/UDP, input the port the remote device listens on (9761 by default).

KNX Group column

Using the KNX protocol, you define groups, which are the link to control the outputs.

Frame field

Type in the commands that will be sent.

Try! button

The button allows the user to test the data frame operation.

KNX addressing

KNX communication is carried out by broadcasting data to specified groups. The output channels react to groups defined in input channels. The groups can be assigned to different outputs.

The group addressing in KNX has the following format: a/b/c

- a: main group 0-31 (the standard specifies 0-15),
- b: intermediate group 0-7,
- c: subgroup 0-255.

e.g.: 4/0/8

Example group assignment:

Room	Control object	Funkcja
1 – kitchen	0 – lighting	0 – main lighting
2 – living room	1 – sockets	1 – additional lighting
3 – boiler room	2 – shutters	2 – northern side shutter

4 – garage	3 – ventillation	3 – southern side shutter

Creating groups:

- 1/0/0 – control main lighting in the kitchen,
- 3/0/0 – control main lighting in the boiler room,
- 4/2/3 – control the southern shutter in the garage,
- 2/2/2 – control the northern shutter in the living room.

Example module connections:

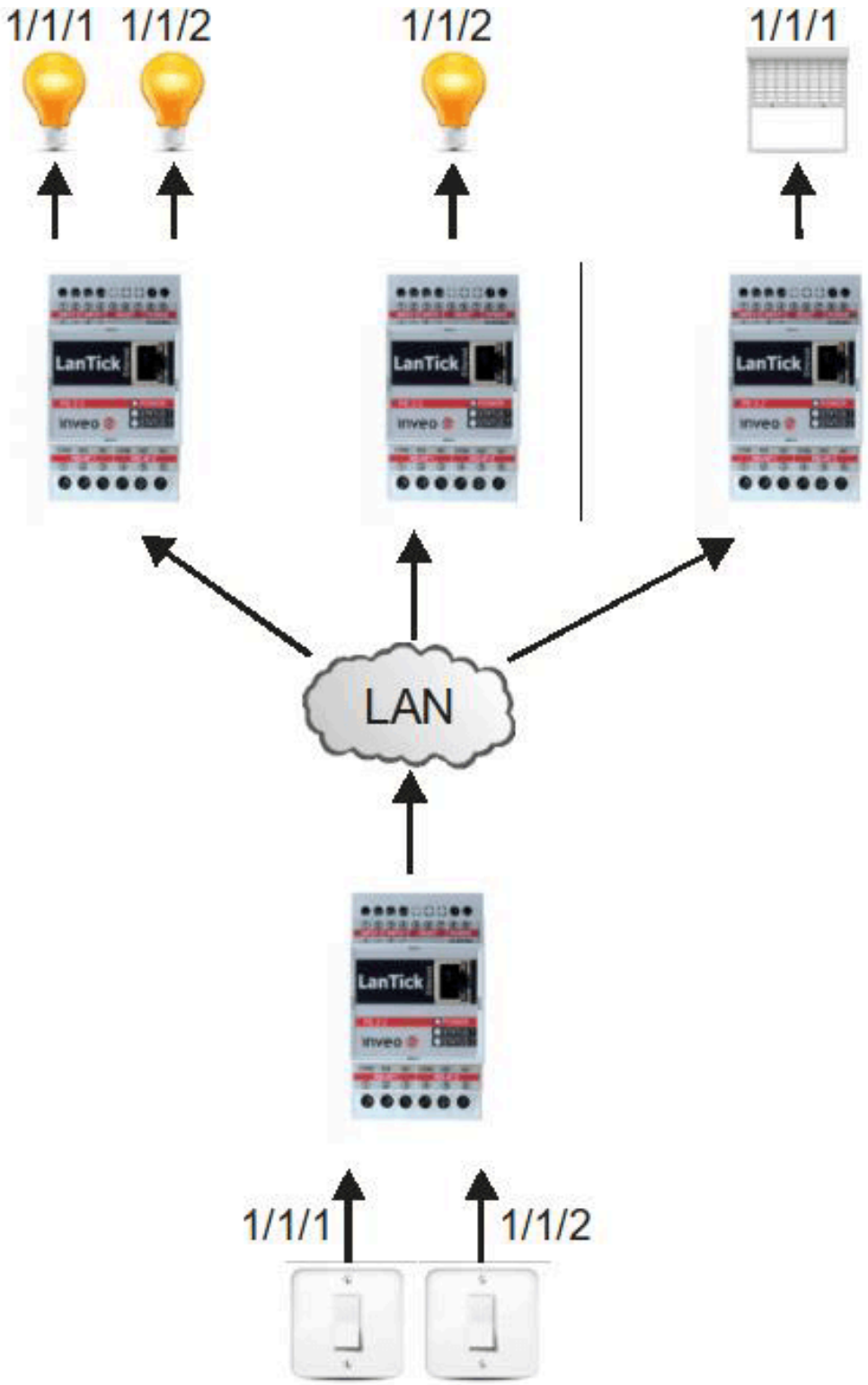
1/1/1
1/1/2
1/1/2
1/1/1
LanTick
LanTick
LanTick
LAN
LanTick
1/1/1
1/1/2

Comm2Other – TCP/UDP

In the **Comm2Other** tab, it us possible to select the TCP or UDP client settings. This means that the "server" device listens on the specified port, and a Lantick module can send a notification to it.

Example 1 – TCP

Assume that Lantick PE-8-0 (8 outputs) (server) and Lantick PE-0-8 (8 inputs) (client) are in the network.
The frame from Lantick PE-0-8 should be sent after input 3 is activated for more than 0,5s, causing output 7 to be activated in Lantick PE-8-0.

Lantick PE-8-0 (server):
IP address: 192.168.111.16
TCP/UDP port: 9761

Comm2Other Lantick PE-0-8:
Channel 3:

Function	Protocol	IP	Port	KNX Group	Frame	Try!
Hold On 0	TCP	192.168.111.16	9761	0/0/0	\x0F\x01\x06\x01\x01\x00\x00\x00\x00\x00\x18	Try!

The frame is stored in HEX format: `\x0F\x01\x06\x01\x01\x00\x00\x00\x00\x00\x18`

Example 2 – UDP

Assume that Lantick PE-8-0 (8 outputs) (server) and Lantick PE-0-8 (8 inputs) (client) are in the network.
The frame from Lantick PE-0-8 should be sent after input 7 is deactivated, if it was active for less than 0,5s, causing output 5 to be activated in Lantick PE-8-0.

Lantick-8-0 (server):
IP address: 192.168.111.16
TCP/UDP port: 9761

Comm2Other Lantick-0-8:
Channel 7:

Function	Protocol	IP	Port	KNX Group	Frame	Try!
Off 0	UDP	192.168.111.16	9761	0/0/0	\x0F\x01\x04\x01\x01\x00\x00\x00\x00\x00\x16	Try!

The frame is stored in HEX format: `\x0F\x01\x04\x01\x01\x00\x00\x00\x00\x00\x16`

Comm2Other – HTTP GET

By using the HTTP GET protocol, other devices that have HTTP implemented can be controlled. Depending on the current state of the device input, the appropriate HTTP protocol commands are sent, to which the module with a defined IP address will respond.

Information

Using the HTTP GET protocol for controlling other Lantick modules is generally not recommended – use UDP instead.

The device supports Basic Authentication only.

Example – HTTP GET

Assume that Lantick PE-0-8 (8 inputs) and an external system that requires access credentials are located in a network.

The network should operate as follows:
After input No. 1 is activated in Lantick PE-0-8, the device sends a data frame to an external system. It should be noted that it may sometimes be required to authenticate using a username and a password while using the HTTP protocol. The username and password can have up to 30 characters each.

External system:
IP address: 192.168.111.16
HTTP port: 80
username: admin
password: admin12

Comm2Other Lantick PE-0-8:
Channel 1:

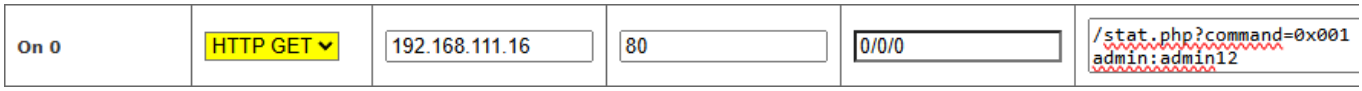

`/stat.php?command=0x001` – Command that will be sent,
admin:admin12 – Authentication username:password.

Cloud control

Inveo Dashboard allows for controlling module outputs and input state preview via the http://dash.inveo.com.pl webpage.

After clicking **Enable Inveo Dashboard** in the **Administration** tab, the module sends the current input/output state to the server.

To use Inveo Dashboard, an activated account is required.

After typing the address into a web browser, click **Create an account**. Fill in all fields in the new window and solve the the reCAPTCHA.



Click **Create** after filling in the form. An e-mail message containing a confirmation link will be sent to the e-mail address provided during the sign-up process.

After logging into the account, add the devices that you want to control and preview status of.



Copyright © 2015 Inveo s.c. Web:1.0

After clicking **Add device**, a window used to provide a key read from a Lantick module will appear. The key is located in the **Administration** tab.



A window containing required data will appear after clicking on the hyperlink.



To add a new device, paste the key from the first field.

The device can be deleted by providing the key from the second field.

Cloud program control

It's possible to control Lantick modules via the cloud using external applications that can send HTTP requests. To achieve that, click **Edit** on the module tile you're interested in.

Scrolling the page down, a HTTP request syntax will appear.

Request syntax:

`https://dash.inveo.com.pl/rest.php?id=<id>&ch=[0..n]&action=[get|on|off|invert]&user=<dash_username>&pass=<dash_pass>`

- `<id>` – Module-specific ID number,
- `[0..n]` – Index of the channel to be previewed or controlled (e.g. for Lantick PE-2-2, allowed channels are 0 through 3),
- `[get|on|off|invert]` – Type of action to be executed:
  - `get` – Preview of current channel state,
  - `on` – Channel activation,
  - `off` – Channel deactivation,
  - `invert` – Channel state inversion.
- `<dash_username>` – Inveo Dashboard user name,
- `<dash_pass>` – Inveo Dashboard user password.

> **Tip**
>
> **The `on`, `off` and `invert` commands return `OK` after execution.**

Windows command line control programme

When controlling the module from the command line, the cURL program can be used.

First, **Enable Program Access** in the **Administration** tab.

Example

Read output state, module IP address 192.168.0.231:
Access to `stat.php` requires authentication. In this case, we precede the command with `-u <username>:<password>`.

In response, the device will send the following information:

```
<response>
    <prod_name>Lantick-1-1</prod_name>
    <user_name/>
    <out>0000000000000000</out>
    <on>0000000000000000</on>
    <in>0000000000000000</in>
    <counter1>3</counter1>
    <counter2>0</counter2>
    <counter3>0</counter3>
    <counter4>0</counter4>
    <counter5>0</counter5>
    <counter6>0</counter6>
    <counter7>0</counter7>
    <counter8>0</counter8>
    <counter9>0</counter9>
    <counter10>0</counter10>
    <counter11>0</counter11>
    <counter12>0</counter12>
    <counter13>0</counter13>
    <counter14>0</counter14>
    <counter15>0</counter15>
    <counter16>0</counter16>
    <insim/>
</response>
```

Section	Description
`<prod_name>`	Module type
`<out>`	Output mode
`<on>`	Output state (Activated/Deactivated)
`<in>`	Input state (Activated/Deactivated)
`<counter1>`	Counter
`<temp1>`	Measured temperature - applies only to Nano Temp

Linux control programme

cURL can be used in Linux:

> **Tip**
>
> **Access to `stat.php` requires authentication.**
> **Access to `status.xml` does not require authentication.**

```
curl -u admin:admin00 "http://192.168.111.15/stat.php" -w "\n" 2>/dev/null | grep 'prod_name' | awk -F "[><]" '/prod_name/{print $3}'
```

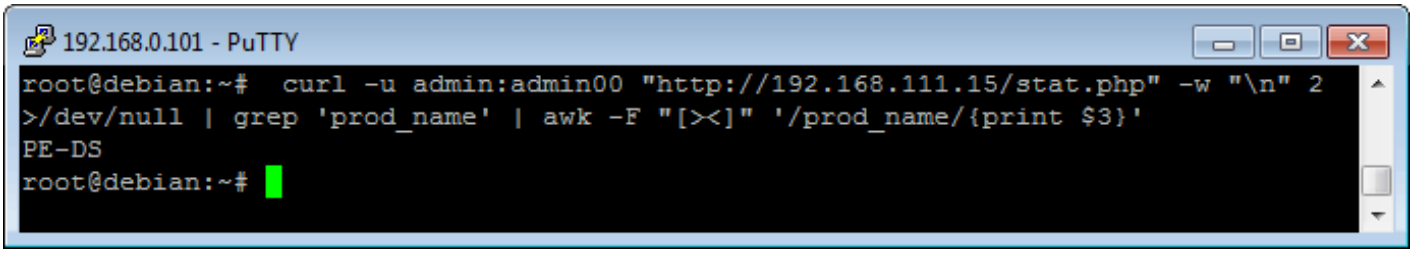

Modbus TCP

To activate the function, go to **Administration > Enable Modbus TCP Protocol**. Default port: 502.

The device supports the following Modbus functions:

- 0x01 Read Coils
- 0x03 Read Holding Register
- 0x05 Write Single Coil
- 0x06 Write Single Register
- 0x0F Write Multiple Coils
- 0x10 Write Multiple Registers

Holding Registers addressing

Address	Name	R/W	Description
1	T1On	R/W	Output 1 activation time (*0,1s)
2	T1Off	R/W	Output 1 deactivation time (*0,1s)
3	Rel1Mode	R/W	Output No. 1 mode: 1 – Static 2 – Toggle 3 – TimeBased
4-5	Counter1	R/W	32-bit value of counter No. 1
6-10	Counter2	R/W	as above, channel 2
...		R/W	as above, channels 3 ÷ 15
76-80		R/W	as above, channel 16
4000	T1On	R/W	Output 1 activation time (*0,1s)
4001-4007	TxOn	R/W	Output x activation time (*0,1s) for x = 2 ÷ 8
4008	T1Off	R/W	Output 1 deactivation time (*0,1s)
4009-4015	TxOff	R/W	Output x deactivation time (*0,1s) for x = 2 ÷ 8
4016	Rel1Mode	R/W	Output No. 1 mode: 1 – Static 2 – Toggle 3 – TimeBased
4016-4023	RelxMode	R/W	Output No. x mode: for x=1-8 1 – Static 2 – Toggle 3 – TimeBased
4028-4029	Counter1	R/W	32-bit value of counter No. 1
4030-4043	Counterx	R/W	32-bit value of counter No. x, for x = 2 ÷ 8

Coils addressing

Address	Name	R/W	Description (for both input and output channel types)
1	On1	R/W	Channel No. 1 activation/state
1-16	Onx	R/W	Channel No. x activation/state for x = 2 ÷ 16
17	Out1	R	Channel No. 1 state
18-32	Outx	R	Channel No. x state for x = 2 ÷ 16
1000	On1	R/W	Channel No. 1 activation/state
1001-1007	Onx	R/W	Channel No. x activation/state for for x = 2 ÷ 8
1008	Out1	R	Channel No. 1 state
1009-1015	Outx	R	Channel No. x state for x = 2 ÷ 8

HTTP GET

Lantick modules can be controled via HTTP. Depending on the current status of the device, HTTP commands the module will react to can be sent. To read the current state of the module, recall the subpage (for example `http://192.168.111.15/stat.php`).

The module state is also available via `htttp://<IP_address>/status.xml`. The `status.xml` resource is read-only and does not require an access password. The device name is not shown in `status.xml`.

```
<response>
    <prod_name>Lantick-PE-2-2</prod_name>
    <user_name>
    <out>0000000000000001</out>
    <on>0000000000000001</on>
    <in>0000000000000000</in>
    <counter1>166</counter1>
    <counter2>7</counter2>
    <counter16>1</counter16>
    <insim/>
</response>
```

Section	Description
`<prod_name>`	Module type
`<user_name>`	Module name defined by the user
`<out>`	Current output state (activated/deactivated) In this case, OUT1 is active.
`<on>`	Outputs status
`<in>`	Inputs status (active/inactive)
`<counterx>`	Counter value for x = 1 ÷ 16

Available HTTP GET commands

Command	Description
`http://<IP_address>/stat.php?on=x`	Activate output. x = output number
`http://<IP_address>/stat.php?off=x`	Deactivate output. x = output number
`http://<IP_address>/stat.php?inv=x`	Invert output state. x = output number
`http://<IP_address>/stat.php?set=87654321`	Set all outputs. Available options: 1 – activate 0 – deactivate n – invert state - – no state change
`http://<IP_address>/stat.php?cnt=x,y`	Set the counter input. x = counter input number, y = value PE-2-2 x = 3,4 PE-4-4 x = 5,6,7,8 PE-0-8 x = 1-8 PE-0-16 x = 1-16
`http://<IP_address>/stat.php?on=x&ton=y&toff=z&astab`	Set output to astable mode (periodic activation and deactivation). x = output number y = activation time z = deactivation time
`http://<IP_address>/stat.php?on=x&bistab`	Set output to bistable mode. x = output number
`http://<IP_address>/stat.php?on=x&ton=y&toff=z`	Set output to timebased mode (single activation delay for defined time). x = output number y = activation time z = activation delay
`http://<IP_address>/stat.php?rollup=x`	Open shutter, where x = shutter number PE-2-2 x = 1 PE-4-4 x = 1,2 PE-8-0 x = 1,2,3,4 PE-16-0 x = 1,2,3,4,5,6,7,8
`http://<IP_address>/stat.php?rolldown=x`	Close shutter. x = shutter number as above

`http://<IP_address>/stat.php?rollus=x`	Open shutter and stop. x = shutter number as above
`http://<IP_address>/stat.php?rollds=x`	Close shutter and stop. x = shutter number as above
`http://<IP_address>/stat.php?rollstop=x`	Stop shutter. x = shutter number as above
`http://<IP_address>/stat.php?rollgate=x`	Open shutter – Stop – close shutter. x = shutter number
`http://<IP_address>/stat.php?rollpos=x,y`	Shutter open. x= shutter number y- percentage of opening PE-2-2 x=1 PE-4-4 x=1,2 PE-8-0 x=1,2,3,4 PE-16-0 x=1,2,3,4,5,6,7,8
Applies only to Lantick modules equipped with digital inputs	
`http://<IP_address>/stat.php?c2o_on=x`	Send the frame defined in **Comm2Other** (channel numbering starts from 0) for **On** frame. x = channel number
`http://<IP_address>/stat.php?c2o_off=x`	Send the frame defined in **Comm2Other** (channel numbering starts from 0) for **Off** frame. x = channel number
`http://<IP_address>/stat.php?c2o_hon=x`	Send the frame defined in **Comm2Other** (channel numbering starts from 0) for **Hold On** frame. x = channel number
`http://<IP_address>/stat.php?c2o_hoff=x`	Send the frame defined in **Comm2Other** (channel numbering starts from 0) for **Hold Off** frame. x = channel number

Examples of module control via HTTP:

1. Activate the OUT2 output: `http://192.168.111.15/stat.php?on=2`
2. Invert the state of OUT1: `http://192.168.111.15/stat.php?inv=1`
3. Deactivate the OUT2 output: `http://192.168.111.15/stat.php?off=2`
4. Activate output 1; negate 2: `http://192.168.111.15/stat.php?set=000000n1`
5. Set the channel 3 counter value to 1234: `http://192.168.111.15/stat.php?cnt=3,1234`
6. Send the frame defined in **Comm2Other** for **Hold On** of channel 5: `192.168.111.15/stat.php?c2o_hon=4`

TCP/UDP/IP communication protocol description

Data frame for TCP/UDP port 9761:

Command name	Byte No.	1	2	3	4	5	6	7	8	9	10	11	
	Byte name	SOF	CMD	Channel	Data 1	Data 2	Data 3	Data 4	Data 5	Data 6	Data 7	CRC	Returns
Set outputs	dec	15	1	0-7	Mode [1-3]	On/ Off [0-1]	TON LSB	TON MSB	TOFF LSB	TOFF MSB	State after powe-up	CRC	OK
	hex	0x0F	0x01	0x00	Mode [1-3]	0-1	TON LSB	TON MSB	TOFF LSB	TOFF MSB	0-1	CRC	OK
Read channel parameters	dec	15	2	0-7	x	x	x	x	x	x	x	CRC	
	hex	0x0F	0x02	0-7	x	x	x	x	x	x	x	CRC	
Set input counter	dec	15	10	0-7	0-7	8-15	16-23	24-31	x	x	x	CRC	
	hex	0x0F	0x0A	0-7	0-7	8-F	10-17	18-1F	x	x	x	CRC	
Read input counter	dec	15	12	0-7	x	x	x	x	x	x	x	CRC	
	hex	0x0F	0x0C	0-7	x	x	x	x	x	x	x	CRC	
EEPROM write	dec	15	20	0	10	0	0	0	0	0	11	CRC	OK
	hex	0x0F	0x14	0x00	0x0A	0x00	0x00	0x00	0x00	0x00	0x0B	0x38	OK
Read channel state	dec	15	100	x	x	x	x	x	x	x	x	CRC	CH7-CH0*
	hex	0x0F	0x64	x	x	x	x	x	x	x	x	CRC	CH7-CH0*
Read channel name	dec	15	101	0-7	x	x	x	x	x	x	x	CRC	STRING
	hex	0x0F	0x65	0-7	x	x	x	x	x	x	x	CRC	STRING
Read device name	dec	15	200	x	x	x	x	x	x	x	x	CRC	STRING
	hex	0x0F	0xC8	x	x	x	x	x	x	x	x	CRC	STRING

* Chx returns 2 bytes:

1 – output state,

2 – coil or input state.

Description	Value	Meaning
On/Off	0	Off
	1	On
Mode	1	Bistable
	2	Astable
	3	1- trigger
CRC	Sum of bytes	

The module listens on TCP/UDP port 9761 by default. Example frames:

Activation of output #1 in static mode

	SOF	CMD	CH	D1	D2	D3	D4	D5	D6	D7	CRC
dec	15	1	0	1	1	0	0	0	0	0	18
hex	0x0F	0x01	0x00	0x01	0x01	0x00	0x00	0x00	0x00	0x00	0x12

```
15 1 0 1 1 0 0 0 0 0 18
0x0F 0x01 0x00 0x01 0x01 0x00 0x00 0x00 0x00 0x00 0x12
```

Deactivation of output #1

	SOF	CMD	CH	D1	D2	D3	D4	D5	D6	D7	CRC
dec	15	1	0	1	0	0	0	0	0	0	17
hex	0x0F	0x01	0x00	0x01	0x01	0x00	0x00	0x00	0x00	0x00	0x11

```
15 1 0 1 0 0 0 0 0 0 17
0x0F 0x01 0x00 0x01 0x00 0x00 0x00 0x00 0x00 0x00 0x11
```

Read input #2 counter value

	SOF	CMD	CH	D1	D2	D3	D4	D5	D6	D7	CRC
dec	15	12	1	0	0	0	0	0	0	0	28
hex	0x0F	0x0C	0x01	0x00	0x00	0x00	0x00	0x00	0x00	0x00	0x1C

```
15 12 1 0 0 0 0 0 0 0 28
0x0F 0x0C 0x01 0x00 0x00 0x00 0x00 0x00 0x00 0x00 0x1C
```

Set input #2 counter to 100

	SOF	CMD	CH	D1	D2	D3	D4	D5	D6	D7	CRC
dec	15	10	1	100	0	0	0	0	0	0	126
hex	0x0F	0x0A	0x01	0x64	0x00	0x00	0x00	0x00	0x00	0x00	0x7E

```
15 10 1 100 0 0 0 0 0 0 126
0x0F 0x0A 0x01 0x64 0x00 0x00 0x00 0x00 0x00 0x00 0x7E
```

TCP/UDP in program control

The Lantick devices can be controlled via TCP/UDP using text commands. The module listens on port 9761. All HTTP GET commands are supported.

On the device's webpage, go to the **Administration** tab and **Enable Program access**. **Save** the changes.

Send the character string beginning with '?' to port 9761 along with the appropriate command.

Examples

`?set=1110n01n` – Control all outputs at once. Outputs 2, 6, 7 and 8 will be activated. Outputs 1 and 4 will invert their state. Outputs 3 and 5 will be deactivated.
`?on=7` – Deactivate output No. 7.
`?on=4&bistab` – Set output No. 4 to bistable mode and activate it.
`?on=2&ton=1200&toff=6000` – Set output 2 to **TimeBased** mode and activate it after 10 minutes (6000 * 0,1s) for 2 minutes. `?rolldown=1` – Close shutter 1.
`?rollgate=3` – Open shutter 3 – Stop – Close shutter.

Application examples

Bridge connection between two Lantick modules

Objective: Configuring of two Lantick modules for cooperation, where one device operates as a transmitter and the other one as a receiver with TCP/IP port connection.

Implementation instructions:

First (transmitter) module configuration:

- Set the IP address of the device that will operate as a transmitter: `192.168.111.15`
- Enter the **Administration** tab and set the IP address of the controller (second module) in the **Destination IP** field: `192.168.111.16`
- In the **Port** field, set the value: `9761`

Destination Client Settings		
Name	**Value**	**Description**
Destination IP	192.168.111.16	Address of other device to communicate (1 to 1 TCP connection)
Destination Port	9761	Port to communicate

- In the **Channel** tab, go to **Channel 1** and set the **Dest** field to: `dest 1`

> **Information**
>
> **This means that Input 1 in the 192.168.111.15 module will be responsible for activation of Output 1 in the 192.168.111.16 module.**

- Next, in the **Channel** tab, go to **Channel 2** and set the **Dest** field to: `dest 2`

> **Information**
>
> **This means that Input 2 in the 192.168.111.15 module will be responsible for activation of Output 2 in the 192.168.111.16 module.**

Second (receiver) module configuration:

- Set the IP address of the device that will operate as a receiver: `192.168.111.16`

Testing:

After both modules are configured, you can start testing:

- Trigger **Input 1** in the 192.168.111.15 module (eg. with a button or an external signal).
- Verify if **Output 1** in the 192.168.111.16 module has been triggered.
- Trigger **Input 2** in the 192.168.111.15 module and verify if **Output 2** in the 192.168.111.16 module has been triggered.

Operation summary:

- Thanks to this configuration, after the 192.168.111.15 module inputs are triggered, the corresponding outputs in the 192.168.111.16 module will be automatically activated, which enables the connection of two devices in an automation system.

> **Tip**
>
> **You can use the simulation mode to test the configuration. Type the following in a web browser:**
> `http://ip_address/stat.php?insim=1`

Description:

A bridge connection between two Lantick modules allows for creation of more advanced automation systems where one device controls the outputs based on signals received from the other device. Thanks to this configuration both devices can cooperate using a wired or wireless connection, allowing for automatic output activation in response to external inputs.

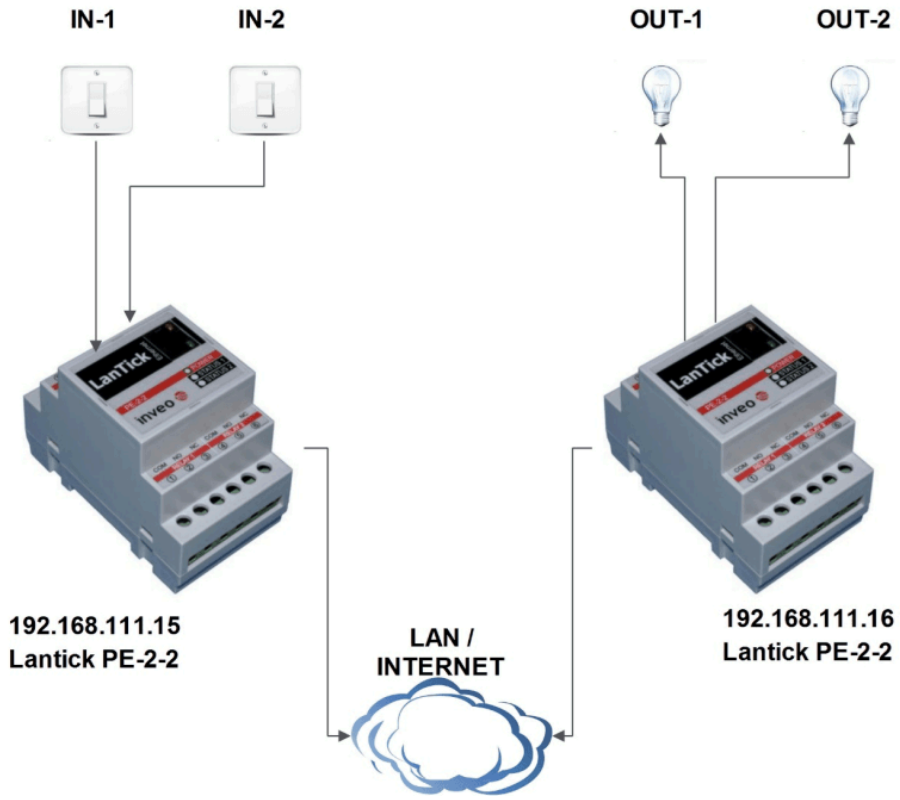

Window shutter motor connection to the PE-2-2 module

Objective: Window shutter control using the Lantick PE-2-2 module and opening/shutting relays. The configuration includes the setting of Full Move Time, which is crucial for correct system operation.

Implementation instructions:

1. **Connecting the shutter motor to the PE-2-2 module:**
   - Make sure the motor is connected to the Lantick PE-2-2 device correctly.
   - The shutter motor must be connected to the appropriate relay outputs of the module - for example **Output 1** and **Output 2**.
   - **Output 1** will be responsible for unveiling of the roller shutter and **Output 2** for covering it up.
2. **Full shutter move time configuration:**
   - In the PE-2-2 control panel go to the **Channel Configuration** tab.
   - Select the appropriate channel (eg. **Channel 1**) responsible for controlling the shutter.
   - Define **Full Move Time** – the time needed for the shutter to fully open or close. If the shutter completes its motion in 30 seconds, set **Full Move Time** to 30 seconds (300).

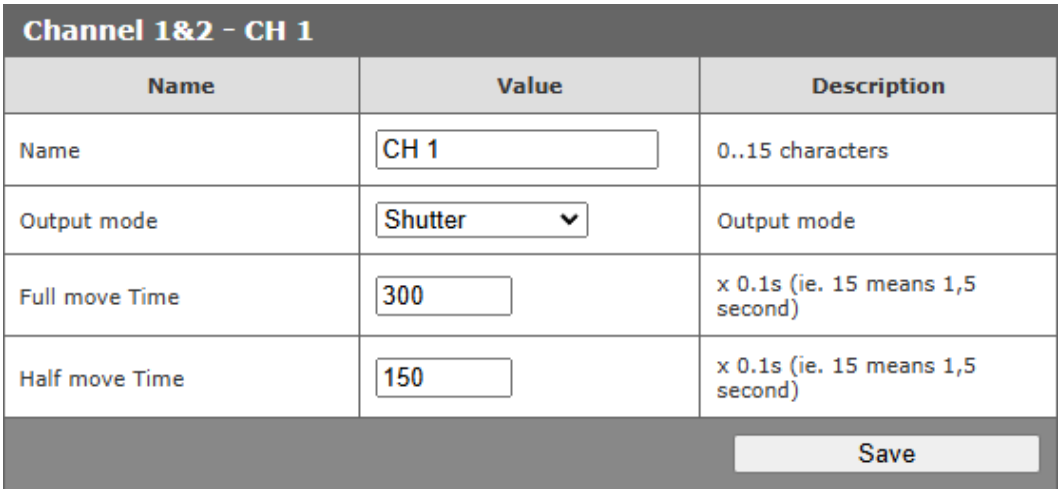

Testing:

After applying the settings, make sure the shutter operates correctly. It should open after 30 seconds and close after another 30 second period. If the shutter is operating correctly, you can change the movement and delay times to suit them to your needs.

Connection of a signalling device or additional devices:

You can also connect a signalling device to the output to notify you when the shutter fully opens or closes.

Description:

Shutter control in home automation systems using the PE-2-2 module enables precise control of their movement. In this function, correct Full Move Time setting is crucial - enabling synchronization of relays to the time needed to fully open or close the shutters.

The Lantick PE-2-2 enables fully automatic shutter control. The system can be easily adapted to the user's individual needs, taking the delay, opening and closing times into consideration.

Monitoring of communication between two Lantick devices using the Comm Monitor function

Objective: Using the **Comm Monitor** function to monitor if the Lantick device responsible for alarms is receiving signals from the alarm control unit. If no signal is present, the device activates an alarm device (eg. a bell).

Implementation instructions:

Connecting the Lantick devices:

- Make sure that both Lantick devices are connected to the same local network.
- Device 1 (np. `192.168.111.15`) is connected to the alarm system.
- Device 2 (np. `192.168.111.16`) serves the function of a receiver monitoring communication with Device 1.

Comm Monitor configuration on Device 2:

- Log in to the Device 2 control panel using a web browser, entering the IP address (eg. `http://192.168.111.16`).
- Go to the **Administration** tab.
- Select **Enable Program Access**.

Enable Program Access	☑	Needed by TCPrel and 1 to 1 TCP connection (Destination Client).

- Next, in the **Channel** tab, **Output mode** row select **Comm Monitor**.
- Choose a channel (eg. **Channel 4**) to monitor the communications on.

Setting monitoring parameters:

- Set the timeout to **30 seconds** (default value).
- If Device 2 doesn't receive a frame from Device 1 for 30 seconds (eg. the alarm controller doesn't transmit any information), Device 2 will trigger the **Channel 1** alarm signal automatically.

Channel 1 - CH 1

Name	Value	Description
Name	CH 1	0..15 characters
Output mode	Comm Monitor	Output mode
Channel for monitor	4	Selected channel for monitoring, ie. 1,3,5
Timeout	30	Transmission timeout [s]
Power on state	Off	
Invert out	☐	Invert output state (NO->NC)
		Save

Connecting the signalling device:

A signalling device (eg. a bell or a control lamp) can be connected to the **Channel 1** output of Device 2 to notify about communication problems.

Description:

The **Comm Monitor** function is perfect for use in alarm systems where reliable communication between devices is crucial. If the receiving device doesn't receive any signals for a defined time (eg. 30s), it automatically triggers an alarm or a device notifying about connection failure.

Lighting and shutter control in a guest room via KNX

Objective: Designing a lighting and shutter control system for a guest room using two Lantick modules and the KNX system. The mono-stable wall switch allows lightning and shutter control depending on the action type.

Implementation instructions:

1. Configure the Lantick PE-0-8 inputs:
2. In the **Comm2Other** tab configure:
    - Channel 3: assign KNX group 1/1/1 to the **Off 0** function.

- Channel 3: assign KNX group 1/1//2 to the **Hold On 0** function.

Function	Protocol	IP	Port	KNX Group	Frame	Try!
Off 0	KNX	0.0.0.0	0	1/1/1		Try!

Function	Protocol	IP	Port	KNX Group	Frame	Try!
Hold On 0	KNX	0.0.0.0	0	1/1/2		Try!

1. Configure the Lantick PE-8-0 outputs:

2. In the **Channel** tab set channel 1 to bistable mode.

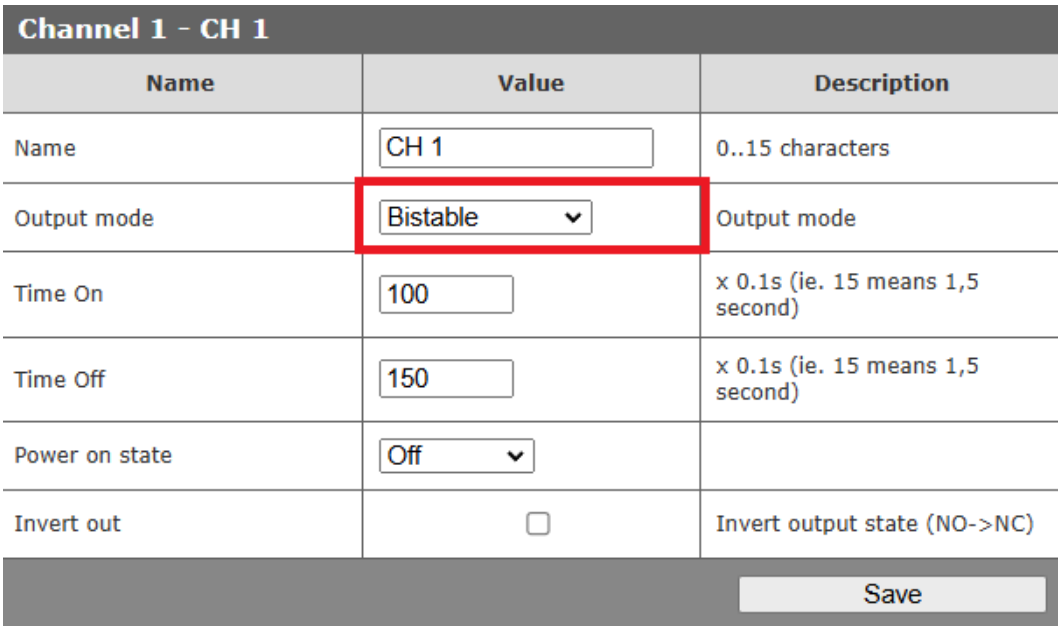

- In the **Comm2Other** tab, configure:
  - Channel 1: assign KNX group 1/1/2 to the **On Control** function.
  - Channel 2: assign KNX group 1/1/1 to the **Invert** function.

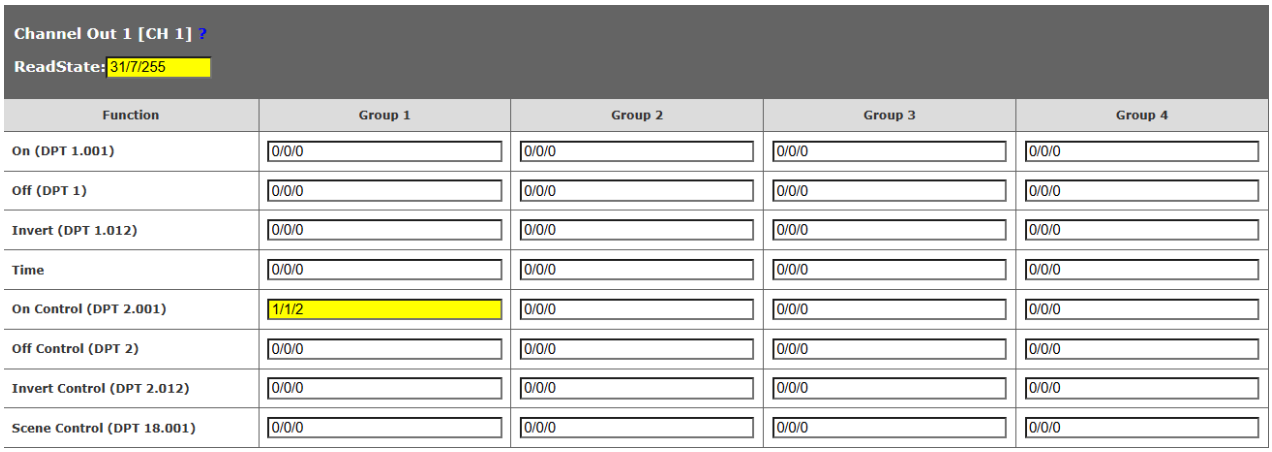

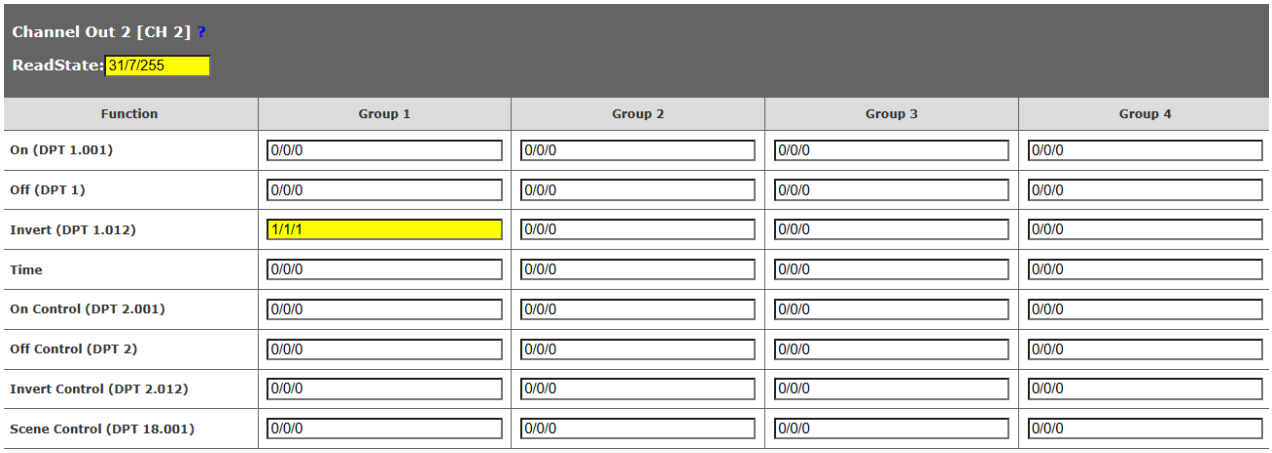

System operation

1. Short button press:
2. Triggers the **Off 0** function, causing a signal to be sent to the KNX group 1/1/1.
3. Lantick PE-8-0 changes the Output 2 (lighting) state, turning the guest room lighting on or off.
4. Button hold:
5. Triggers the **Hold On 0** function, causing a signal to be sen to the KNX group 1/1/2.
6. Lantick 8-0 controls the Output 1 (shutter), alternating between opening an closing the guest room window shutter.

> **Tip**
>
> **You can customize the time a switch needs to be pressed to activate the Hold On function. To do that, go to the Channel tab and change he C2O HoldOn time on Channel 3.**

> **Tip**
>
> **You can use the simulation mode to test the configuration. Type the following address into a web browser: http:///stat.php?insim=1`**

One-to-many or many-to-one communication with connection loss failsafe

Objective: Controling multiple output modules using a single input module. In an event of communication loss, the output modules will switch of automatically after specified time.

Implementation instructions:

Connecting the Lantick devices:

- Make sure that both Lanticks are connected to the same local network.
- Device 1 – Lantick PE-0-8 – serves the function of a Master device, to which a switch is connected. Toggling the switch should cause activation/deactivation of output channels in both output modules.
- Devices 2 and 3 – Lantick PE-2-2 – Slave devices. In the event of a Master - Slave communication loss, all outputs should automatically be deactivated after 10 seconds.

Module No. 1 configuration:

- Log in to the Device 1 control panel using a web browser, entering the IP address (e.g. `http://192.168.111.15`),
- Go to the **Administration** tab,
- **Enable C2O Module**,

Enable Comm2Other Module	☑	Enable Multicast P2P communication. Lantick must be restarted after change.

- In the upper section, a notification about a device reset will appear. Click the highlighted button,
- In the **Channel** tab, for **Channel 1** enter the following settings:
  - **C2O HoldOn time** – 0,
  - **C2O Repetition** – 4.

Channel 1 - CH 1

Name	Value	Description
Name	CH 1	0..15 characters
Destination channel	Dest:Off	Select destintation channel in 1 to 1 TCP connection
C2O HoldOn time	0	Comm2Other: Time for enable HoldX commands. x0.1s (default 5)
C2O Repetition	4	Comm2Other: Repeat frame time [s]. To disable write 0.
Counter input filter	Off	Input transient filter.
Invert in	☐	Invert input state (NO->NC)
		Save

Tip

For increased system reliability, we recommend to set the C2O repetition time to a value 2,5 fold smaller than the output deactivation time.
e.g. 20s = C2O Repetition: 8

- In the **Comm2Other** > **Channel In 1** tab, for **On 0**, select **KNX**, assign the group 1/1/1 and enter the following data frame: `\x01\x00\x64`

Syntax explanation

`\x01` – Relay activation for specified time.
`\x00\x64` – 100 in HEX (10s in 0,1s units)

Tip

If the data frame syntax is displayed incorrectly, click Toggle Frame Format in the menu located at the top of the page.

- For **Off 0**, select **KNX**, assign the group 1/1/2, enter the frame: `\x01`

Channel In 1 [CH 1] ?

ReadState: 31/7/255

Function	Protocol	IP	Port	KNX Group	
On 0	KNX	0.0.0.0	0	1/1/1	\x01\x00\x64
On 1	Disable	0.0.0.0	0	0/0/0	

Function	Protocol	IP	Port	KNX Group	
Off 0	KNX	0.0.0.0	0	1/1/2	\x01
Off 1	Disable	0.0.0.0	0	0/0/0	

> **Tip**
>
> **After making changes, apply them using Save.**

Modules No. 2 and 3 configuration

- Log in to the Device 1 control panel using a web browser, entering the IP address (e.g. `http://192.168.111.15`),
- Go to the **Administration** tab,
- **Enable C2O Module**,

Enable Comm2Other Module	☑	Enable Multicast P2P communication. Lantick must be restarted after change.

- In the upper section, a notification about a device reset will appear. Click the highlighted button,
- In the **Comm2Other** > **Channel Out 1** tab, for **Off 0 (DPT 1)**, assign the group 1/1/2,
- For **Time**, assign 1/1/1.

Channel Out 1 [CH 1] ?

ReadState: 31/7/255

Function	Group 1
On (DPT 1.001)	0/0/0
Off (DPT 1)	1/1/2
Invert (DPT 1.012)	0/0/0
Time	1/1/1
On Control (DPT 2.001)	0/0/0
Off Control (DPT 2)	0/0/0
Invert Control (DPT 2.012)	0/0/0
Scene Control (DPT 18.001)	0/0/0

Tip

After making changes, apply them using Save.

Factory settings, backup

To restore the device to factory settings, hold the **RESET** button for 10 seconds. The button is located on the device's housing:

- In PE-4-4, PE-0-8, PE-8-0, PE-0-16 and PE-16-0 models, the **RESET** button is located on the front panel of the device (wrench symbol).

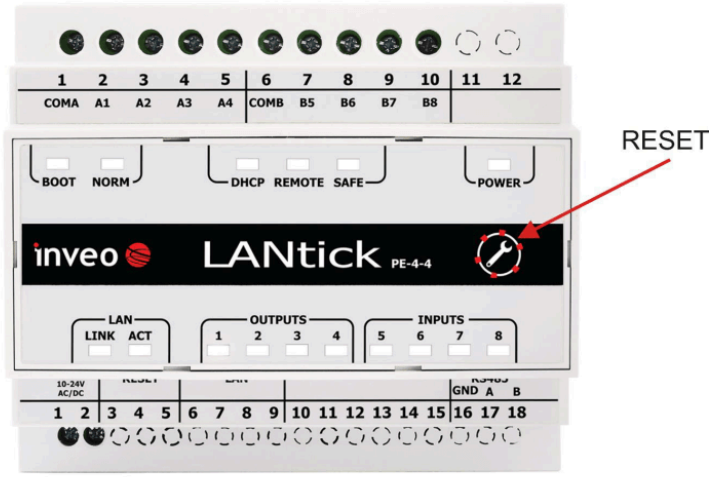

- In PE-2-2, PE-0-4 models, the button is located in the upper section of the device, near the power connector.
- In PE-0-1, PE-1-0, PE-1-1 models, the button is located in the lower section of the device, near the Ethernet port.

Once the above steps have been completed, the device will be set to the following parameters:

- **IP address:** 192.168.111.15
- **IP mask:** 255.255.255.0
- **User:** admin
- **Password:** admin00

Backup / Restoring user settings

To save all user configuration data, download the file from the **Backup** tab:

1. Click the **Download** button in the Backup section.
2. Save the file on your hard drive.

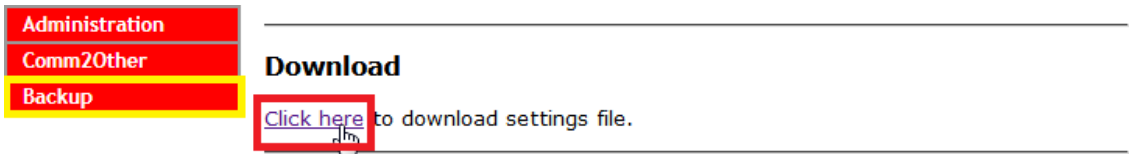

Restoring settings:

1. Select the `backup.bin` file.
2. Click the **Upload** button to restore saved settings.

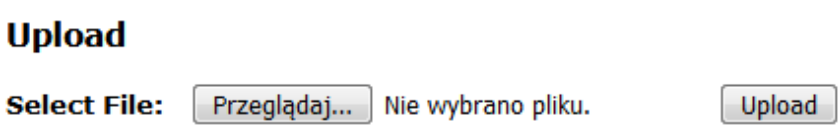

Warranty and manufacturer's liability

> **Warning**
>
> **The manufacturer provides a two-year warranty for the device and post-warranty service for a period of 10 years from the date of introduction of the device to the market. The warranty covers all material and production defects.**

The manufacturer undertakes to respect the warranty agreement, if the following conditions are met:

- All repairs, changes, expansions and device calibrations are carried out by the manufacturer or an authorized service center,
- The power supply system meets the applicable standards,
- The device is operated in accordance with the suggestions presented in this manual,
- The device is operated in accordance with its intended purpose.

The manufacturer assumes no responsibility for consequences resulting from improper installation, improper use of the device, failure to comply with the instruction manual, and repairs made by unauthorized personnel.

> **Warning**
>
> **The device contains no user serviceable parts inside.**

Storage, operation and transport conditions

The device should be stored in enclosed rooms, where the atmosphere is free from vapours and corrosive substances:

- Environment temperature from -30°C to +60°C (-22°F - 140°F),
- Humidity from 25% to 90% (condensation unacceptable),
- Atmospheric pressure from 700 to 1060 hPa.

The device is intended to operate in the following conditions:

- Environment temperature from -10°C do +55°C (14°F - 131°F),
- Humidity from 30% to 75%,
- Atmospheric pressure from 700 to 1060 hPa.

Recommended transport conditions:

- Environment temperature from -40°C do +85°C (-40°F - 185°F),
- Humidity from 5% to 95%,
- Atmospheric pressure from 700 to 1060 hPa.

Installation and device operation:

- The module should be operated in accordance with recommendations provided later in this manual.

Disposal and decommissioning

In an event the device needs to be decommissioned (eg. after its intended life period is surpassed), it is recommended to contact the manufacturer or his representative, who are responsible to respond appropriately, i.e., to collect the device from the user. The user can alternatively contact companies specializing in electronic device or computer equipment disposal and/or decommissioning. Under no condition should the device be placed with other waste.