Inveo Sp. z o.o.

Exter

Instruction Manual

Overview



Purpose of the device

Exter is a device designed to operate autonomically (by operating, for example, a door latch) or to read RFID tags and send their data to a main reader, such as an IND2, RCP2 or BoxID via RS-485 or RS-232.

When a card or an RFID tag is applied to the Exter, the device emits a sound via the built-in buzzer, and then sends the card ID to the main reader or an access controller.

Exter should be mounted near outside doors, while the main reader is located in a safe place. The devices are interconnected with wires.

Changelog

1.1 2nd of June 2025

- Changes to wiring colours

1.0 2nd of April 2025

- Manual revision v1.0

Table of contents

- Overview
  - Purpose of the device
  - Changelog
    - 1.1 2nd of June 2025
    - 1.0 2nd of April 2025
- Device construction
- Connections description
- Connection with a main reader
  - Exter + BoxID/IND2
  - Exter + Clocker/RCP2
- Warranty and manufacturer's liability
  - Storage, operation and transport conditions
  - Disposal and decommissioning

Device construction

Technical characteristics

Parameter	Description
Power supply	5 – 12V DC
Power consumption	max. 1W
Communication	**RS-485** or **RS-232**, depending on the version
External indicators	Buzzer, LED indicator
Ouptut	NO/NC relay

Dimensions

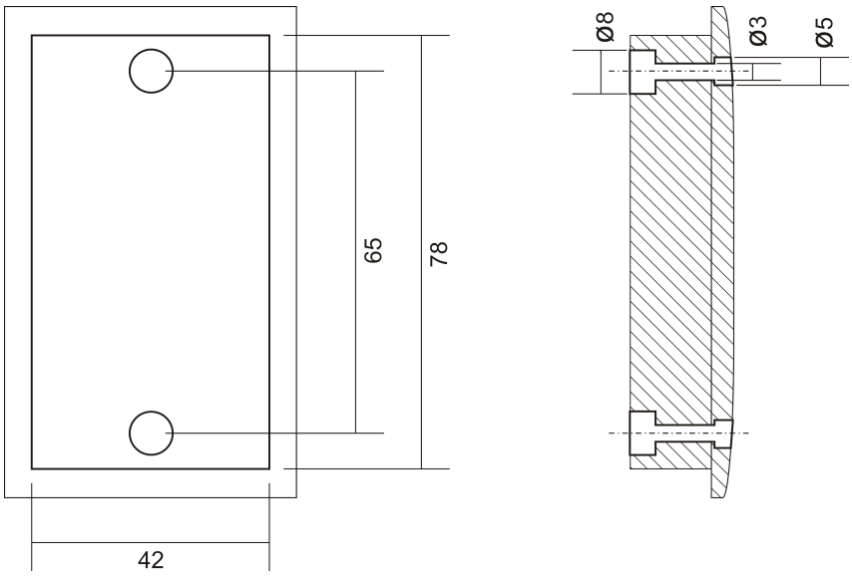

Information

All dimensions are in milimeters.

General view



Connections description

Wire colour	Function
Red	Power +
Brown	Power –
Yellow	RS485 A (TX)
White	RS485 B (RX)
Green	Bootloader
Grey	NO contact
Pink	NC contact
Blue	COM contact

Connection with a main reader

Exter + BoxID/IND2

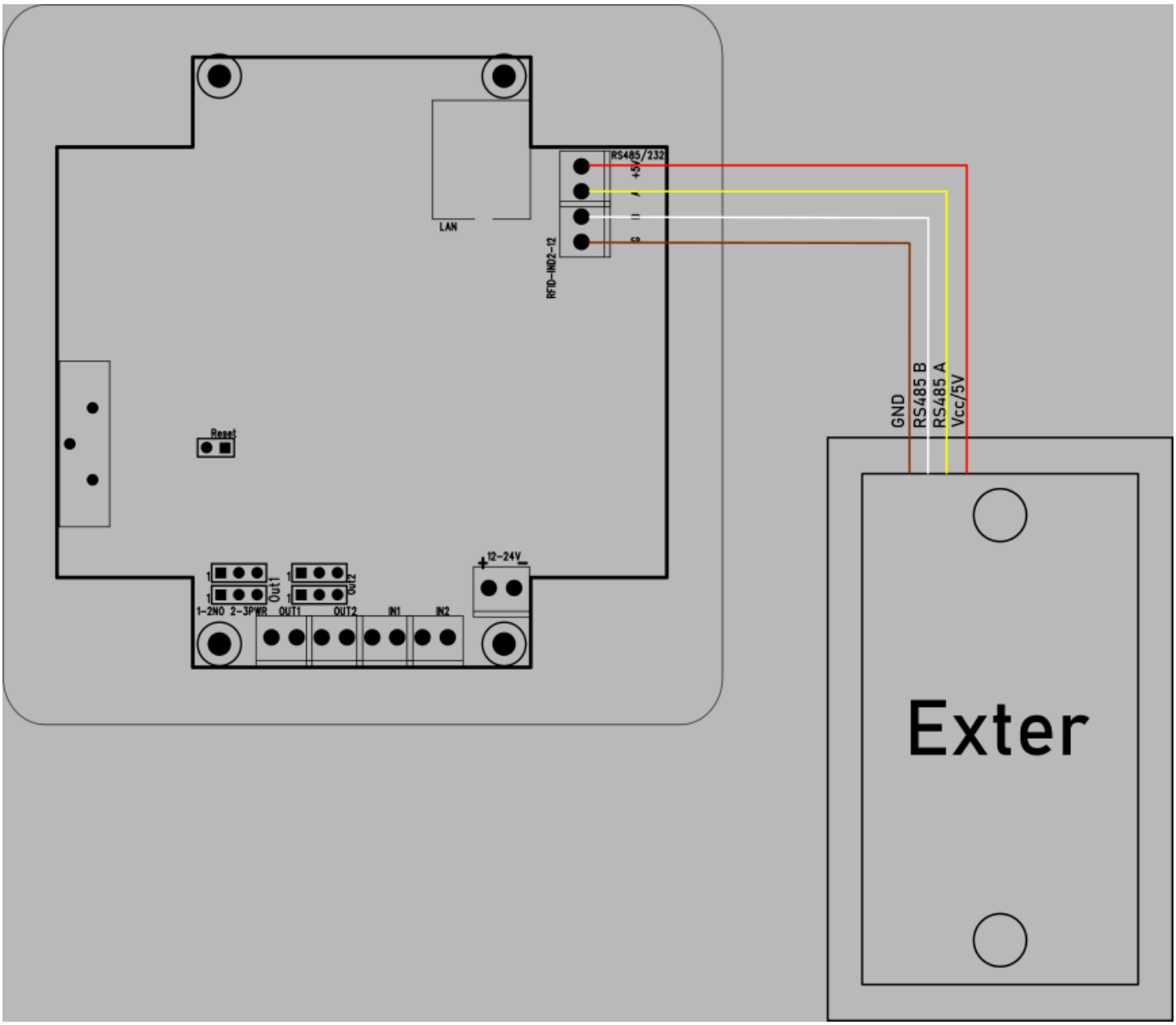

Exter + Clocker/RCP2

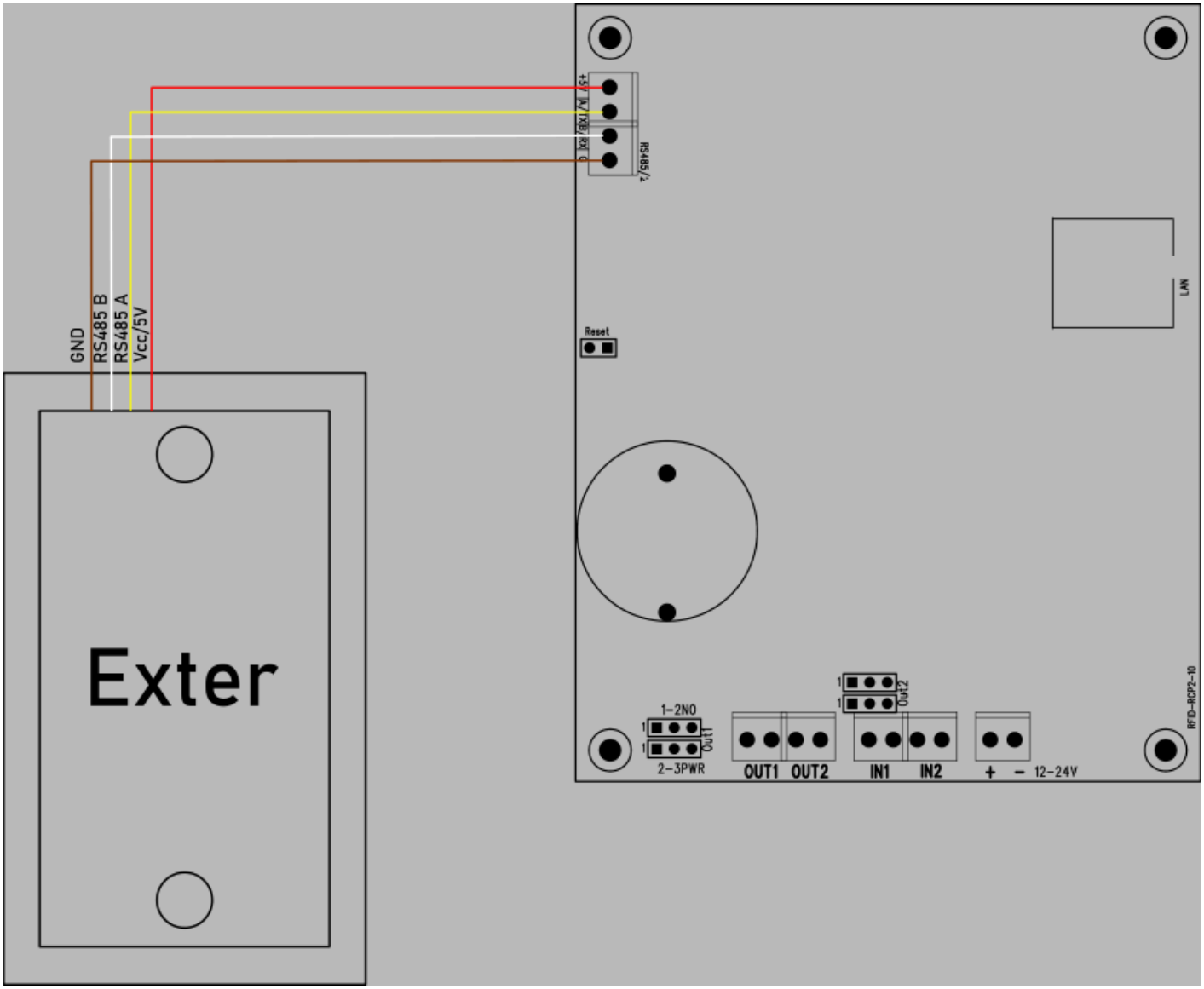

Warranty and manufacturer's liability

> **Warning**
>
> **The manufacturer provides a two-year warranty for the device and post-warranty service for a period of 10 years from the date of introduction of the device to the market. The warranty covers all material and production defects.**

The manufacturer undertakes to respect the warranty agreement, if the following conditions are met:

- All repairs, changes, expansions and device calibrations are carried out by the manufacturer or an authorized service center,
- The power supply system meets the applicable standards,
- The device is operated in accordance with the suggestions presented in this manual,
- The device is operated in accordance with its intended purpose.

The manufacturer assumes no responsibility for consequences resulting from improper installation, improper use of the device, failure to comply with the instruction manual, and repairs made by unauthorized personnel.

> **Warning**
>
> **The device contains no user serviceable parts inside.**

Storage, operation and transport conditions

The device should be stored in enclosed rooms, where the atmosphere is free from vapours and corrosive substances:

- Environment temperature from -30°C to +60°C (-22°F - 140°F),
- Humidity from 25% to 90% (condensation unacceptable),
- Atmospheric pressure from 700 to 1060 hPa.

The device is intended to operate in the following conditions:

- Environment temperature from -10°C do +55°C (14°F - 131°F),
- Humidity from 30% to 75%,
- Atmospheric pressure from 700 to 1060 hPa.

Recommended transport conditions:

- Environment temperature from -40°C do +85°C (-40°F - 185°F),
- Humidity from 5% to 95%,
- Atmospheric pressure from 700 to 1060 hPa.

Installation and device operation:

- The module should be operated in accordance with recommendations provided later in this manual.

Disposal and decommissioning

In an event the device needs to be decommissioned (eg. after its intended life period is surpassed), it is recommended to contact the manufacturer or his representative, who are responsible to respond appropriately, i.e., to collect the device from the user. The user can alternatively contact companies specializing in electronic device or computer equipment disposal and/or decommissioning. Under no condition should the device be placed with other waste.