Inveo Sp. z o.o.

# WebSensor 1 Phase

Instruction Manual

# Overview




## Purpose of the device

The WebSensor 1 Phase is used to detect phase loss, allowing for reliable monitoring of power status in energy systems. It is compatible with Virtus, Daxi and IQIO modules. Thanks to the 3-wire input and two RJ12 connectors, the detector can serve the function of a splitter, facilitating easy system expansion. Additional sensors can be connected to the device (WebSensor), broadening the monitoring and infrastructure management possibilities.

Table of contents


- Overview
  - Purpose of the device
- Device construction
  - Device description
  - Connections diagram
    - WebSensor 1 Phase + IQIO
    - WebSensor 1 Phase + Daxi
- Warranty and manufacturer's liability
  - Storage, operation and transport conditions
  - Disposal and decommissioning

# Device construction

### Dimensions

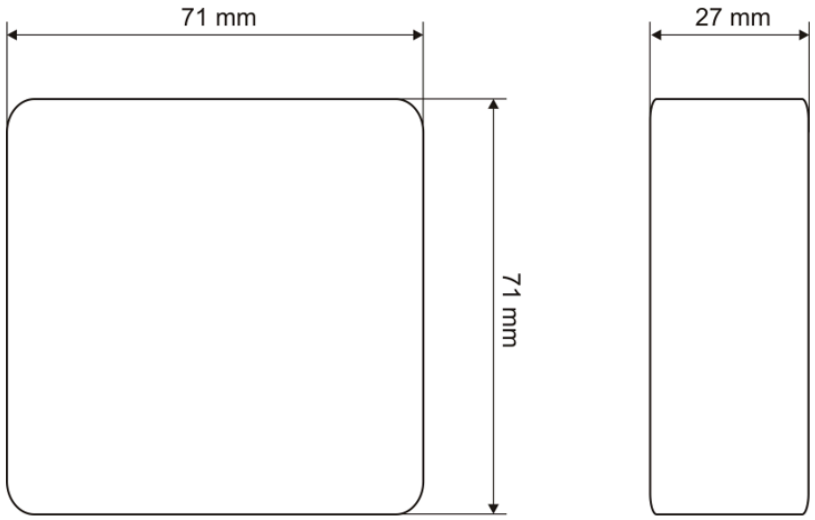


## Device description

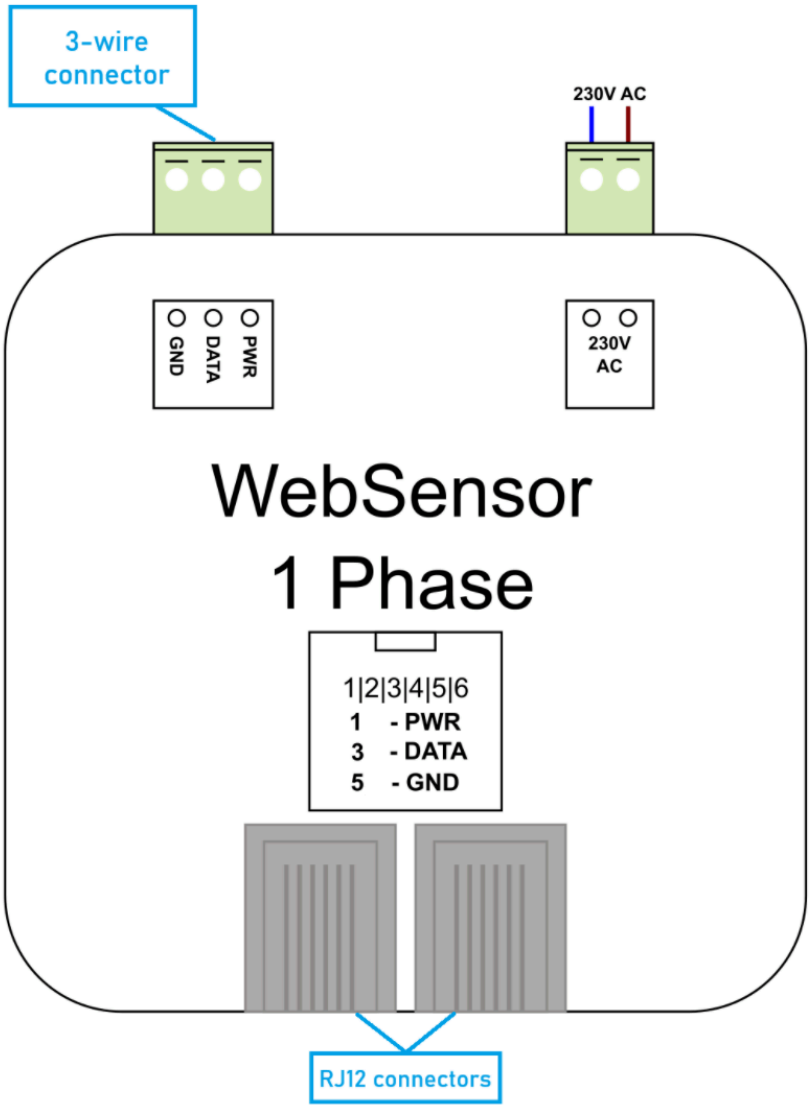
3-wire connector
230V AC
GND
DATA
PWR
230V AC
WebSensor
1 Phase
1|2|3|4|5|6
1 - PWR
3 - DATA
5 - GND
RJ12 connectors

## Connections diagram

### WebSensor 1 Phase + IQIO

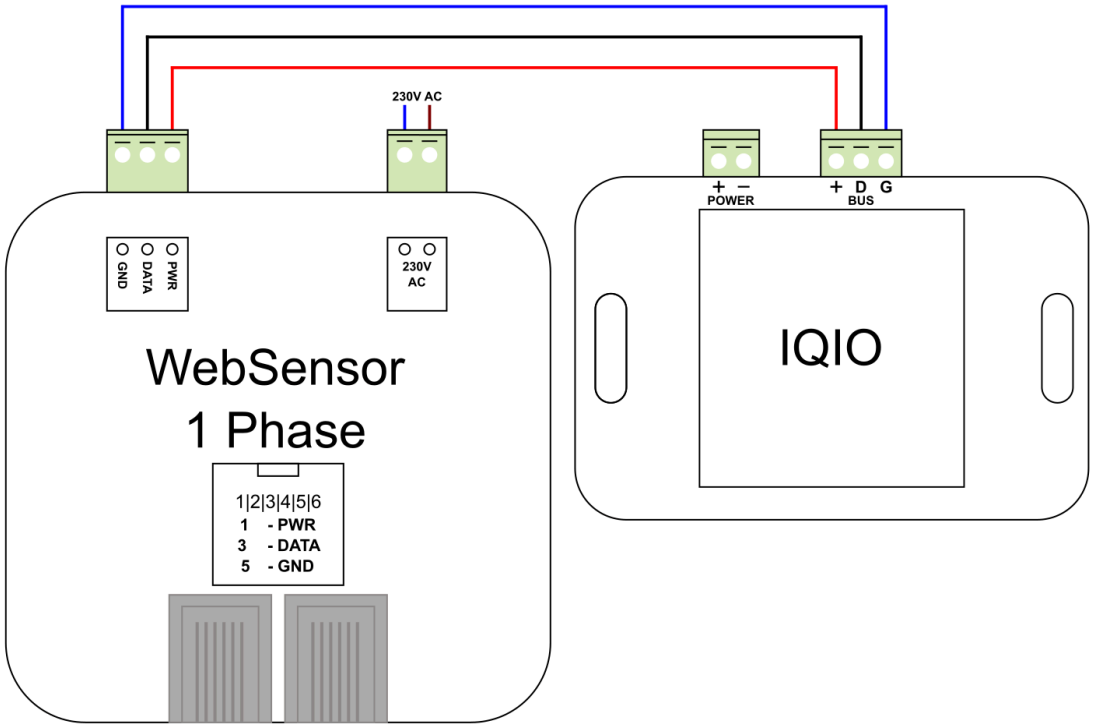

**WebSensor 1 Phase + Daxi**

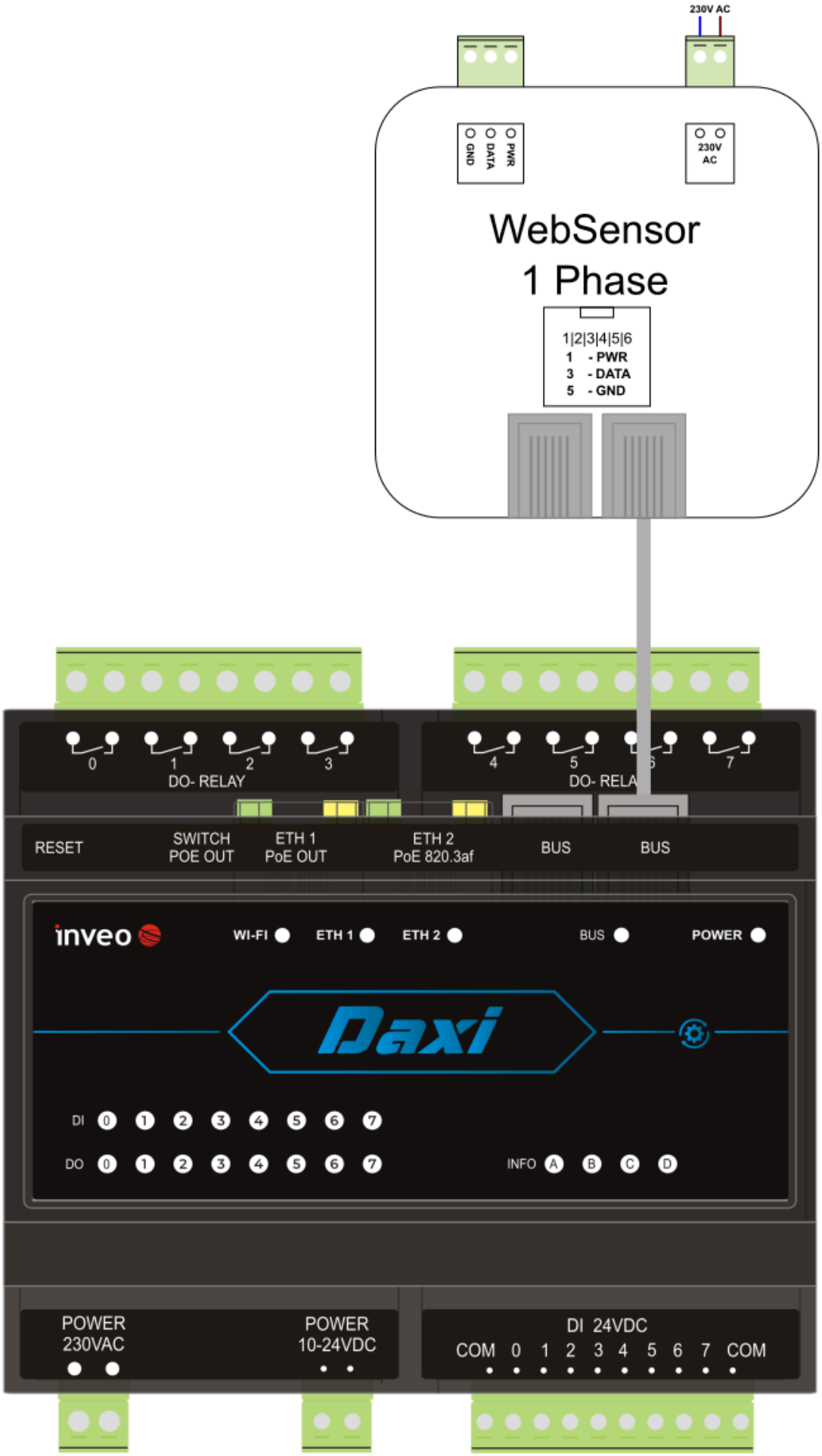
230V AC
GND
DATA
PWR
230V AC
WebSensor
1 Phase
1|2|3|4|5|6
1 - PWR
3 - DATA
5 - GND
0
1
2
3
DO- RELAY
4
5
7
DO- RELA
RESET
SWITCH
POE OUT
ETH 1
PoE OUT
ETH 2
PoE 820.3af
BUS
BUS
inveo
WI-FI
ETH 1
ETH 2
BUS
POWER
Daxi
DI 0 1 2 3 4 5 6 7
DO 0 1 2 3 4 5 6 7
INFO A B C D
POWER
230VAC
POWER
10-24VDC
DI 24VDC
COM 0 1 2 3 4 5 6 7 COM

# Warranty and manufacturer's liability

> **Warning**
>
> **The manufacturer provides a two-year warranty for the device and post-warranty service for a period of 10 years from the date of introduction of the device to the market. The warranty covers all material and production defects.**

The manufacturer undertakes to respect the warranty agreement, if the following conditions are met:

- All repairs, changes, expansions and device calibrations are carried out by the manufacturer or an authorized service center,
- The power supply system meets the applicable standards,
- The device is operated in accordance with the suggestions presented in this manual,
- The device is operated in accordance with its intended purpose.

The manufacturer assumes no responsibility for consequences resulting from improper installation, improper use of the device, failure to comply with the instruction manual, and repairs made by unauthorized personnel.

> **Warning**
>
> **The device contains no user serviceable parts inside.**

## Storage, operation and transport conditions

**The device should be stored in enclosed rooms, where the atmosphere is free from vapours and corrosive substances:**

- Environment temperature from -30°C to +60°C (-22°F - 140°F),
- Humidity from 25% to 90% (condensation unacceptable),
- Atmospheric pressure from 700 to 1060 hPa.

**The device is intended to operate in the following conditions:**

- Environment temperature from -10°C do +55°C (14°F - 131°F),
- Humidity from 30% to 75%,
- Atmospheric pressure from 700 to 1060 hPa.

**Recommended transport conditions:**

- Environment temperature from -40°C do +85°C (-40°F - 185°F),
- Humidity from 5% to 95%,
- Atmospheric pressure from 700 to 1060 hPa.

**Installation and device operation:**

- The module should be operated in accordance with recommendations provided later in this manual.

## Disposal and decommissioning

In an event the device needs to be decommissioned (eg. after its intended life period is surpassed), it is recommended to contact the manufacturer or his representative, who are responsible to respond appropriately, i.e., to collect the device from the user. The user can alternatively contact companies specializing in electronic device or computer equipment disposal and/or decommissioning. Under no condition should the device be placed with other waste.