Inveo Sp. z o.o.

WebSensor CO2-H-T

Instruction Manual

Overview



Purpose of the device

WebSensor CO2-H-T is used to detect carbon dioxide concentration, as well as temperature and humidity measurement. It is compatible with Virtus and Daxi modules. Thanks to the 3-wire input and two RJ12 connectors, the detector can serve the function of a splitter, facilitating easy system expansion. Additional sensors can be connected to the device (WebSensor), broadening the monitoring and infrastructure management possibilities.

Table of contents

- Overview
  - Purpose of the device
- Device construction
- Technical characteristics
  - Connections diagram
    - WebSensor CO2-H-T + Daxi
- Warranty and manufacturer's liability
  - Storage, operation and transport conditions
  - Disposal and decommissioning

Device construction

Dimensions

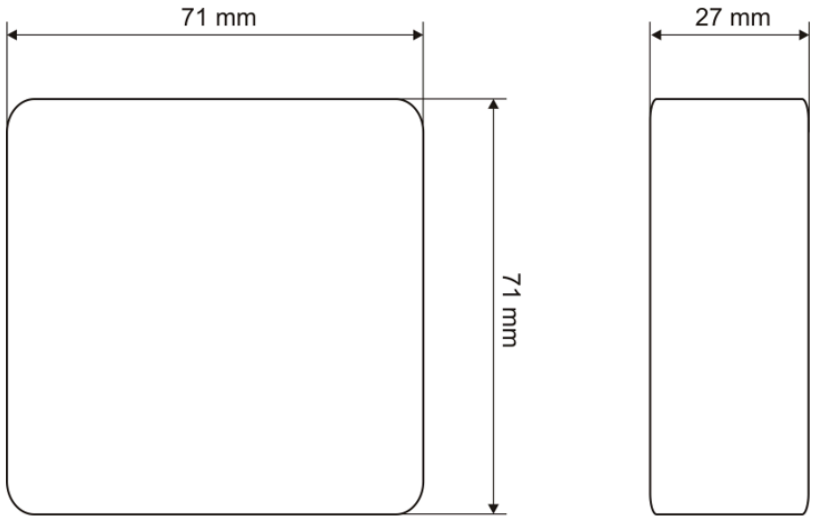

Technical characteristics

Detection element: SCD30

Parameter	**CO_2 concentration**	**Humidity**	**Temperature**
Measurement range	400-10 000ppm	0-100% RH	-40°C - 70°C
Measurement precision	±(30ppm + 3%)	±3% @ 25°C	± (0,4°C+0,023*(T-25°C))
Measurement repeatability	± 10ppm	± 0,1%	± 0,1°C

Connections diagram

WebSensor CO2-H-T + Daxi



Warranty and manufacturer's liability

> **Warning**
>
> **The manufacturer provides a two-year warranty for the device and post-warranty service for a period of 10 years from the date of introduction of the device to the market. The warranty covers all material and production defects.**

The manufacturer undertakes to respect the warranty agreement, if the following conditions are met:

- All repairs, changes, expansions and device calibrations are carried out by the manufacturer or an authorized service center,
- The power supply system meets the applicable standards,
- The device is operated in accordance with the suggestions presented in this manual,
- The device is operated in accordance with its intended purpose.

The manufacturer assumes no responsibility for consequences resulting from improper installation, improper use of the device, failure to comply with the instruction manual, and repairs made by unauthorized personnel.

> **Warning**
>
> **The device contains no user serviceable parts inside.**

Storage, operation and transport conditions

The device should be stored in enclosed rooms, where the atmosphere is free from vapours and corrosive substances:

- Environment temperature from -30°C to +60°C (-22°F - 140°F),
- Humidity from 25% to 90% (condensation unacceptable),
- Atmospheric pressure from 700 to 1060 hPa.

The device is intended to operate in the following conditions:

- Environment temperature from -10°C do +55°C (14°F - 131°F),
- Humidity from 30% to 75%,
- Atmospheric pressure from 700 to 1060 hPa.

Recommended transport conditions:

- Environment temperature from -40°C do +85°C (-40°F - 185°F),
- Humidity from 5% to 95%,
- Atmospheric pressure from 700 to 1060 hPa.

Installation and device operation:

- The module should be operated in accordance with recommendations provided later in this manual.

Disposal and decommissioning

In an event the device needs to be decommissioned (eg. after its intended life period is surpassed), it is recommended to contact the manufacturer or his representative, who are responsible to respond appropriately, i.e., to collect the device from the user. The user can alternatively contact companies specializing in electronic device or computer equipment disposal and/or decommissioning. Under no condition should the device be placed with other waste.