Inveo Sp. z o.o.

WebSensor RTD

Instruction Manual

Overview



Purpose of the device

WebSensor RTD allows Virtus, Daxi and IQIO modules to read temperature off of PT100/PT1000 RTD's. The sensor type can be selecting via two switches located near the sensor connector.

Table of contents

- Overview
  - Purpose of the device
- Device construction
  - Power supply
- Connection diagrams
  - 2-wire sensor
  - 4-wire sensor
  - Virtus, Daxi – RJ12 connector pinout
  - IQIO
- Warranty and manufacturer's liability
  - Storage, operation and transport conditions
  - Disposal and decommissioning

Device construction

Power supply

The sensors are intended to be powered directly from Virtus, Daxi, IQIO or Hero Web Sensor modules.

Dimensions

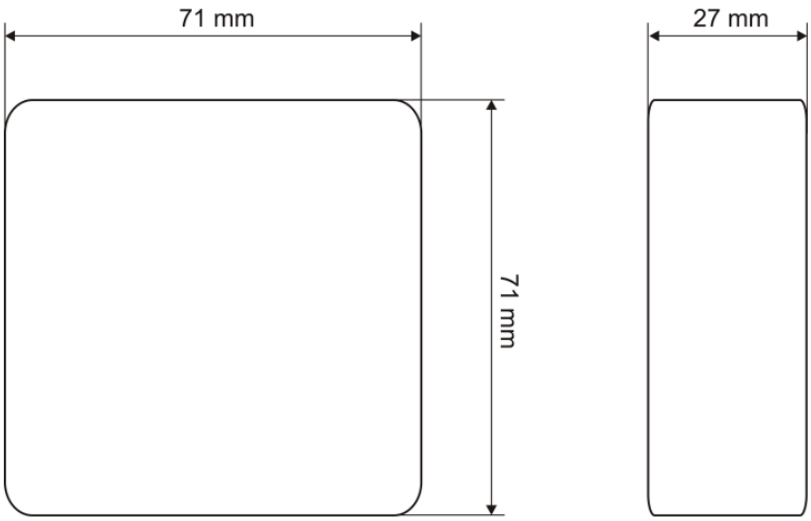

Connection diagrams

2-wire sensor

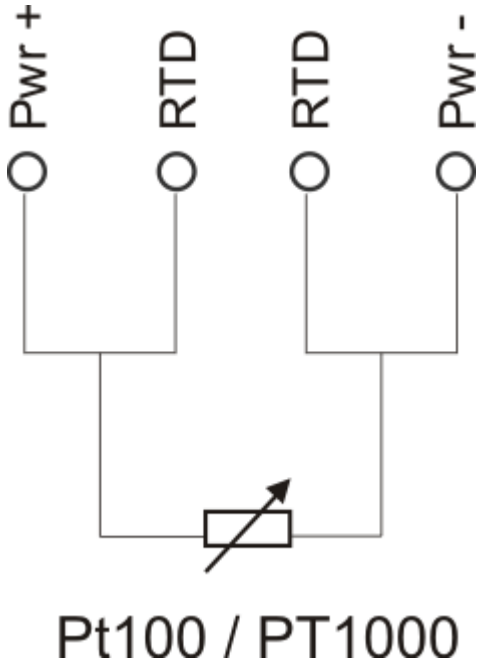

4-wire sensor

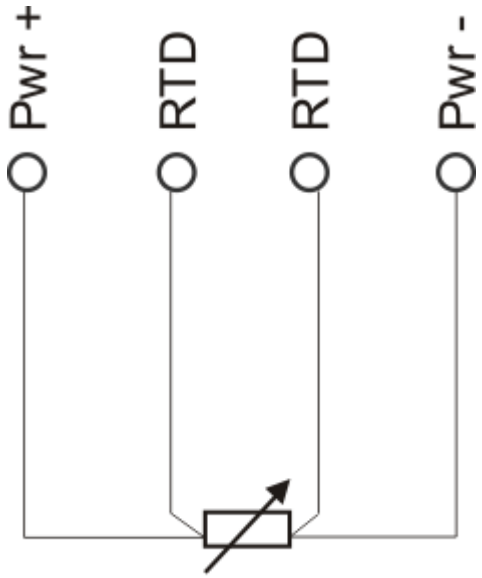

Pt100 / PT1000

Information

3-wire sensors are not supported

Virtus, Daxi – RJ12 connector pinout

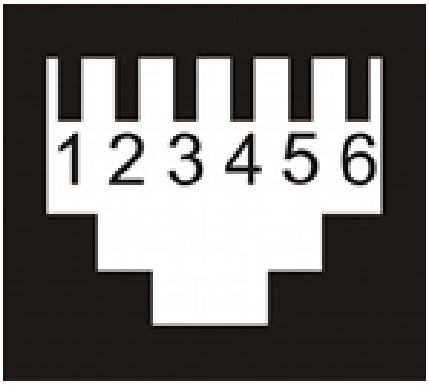

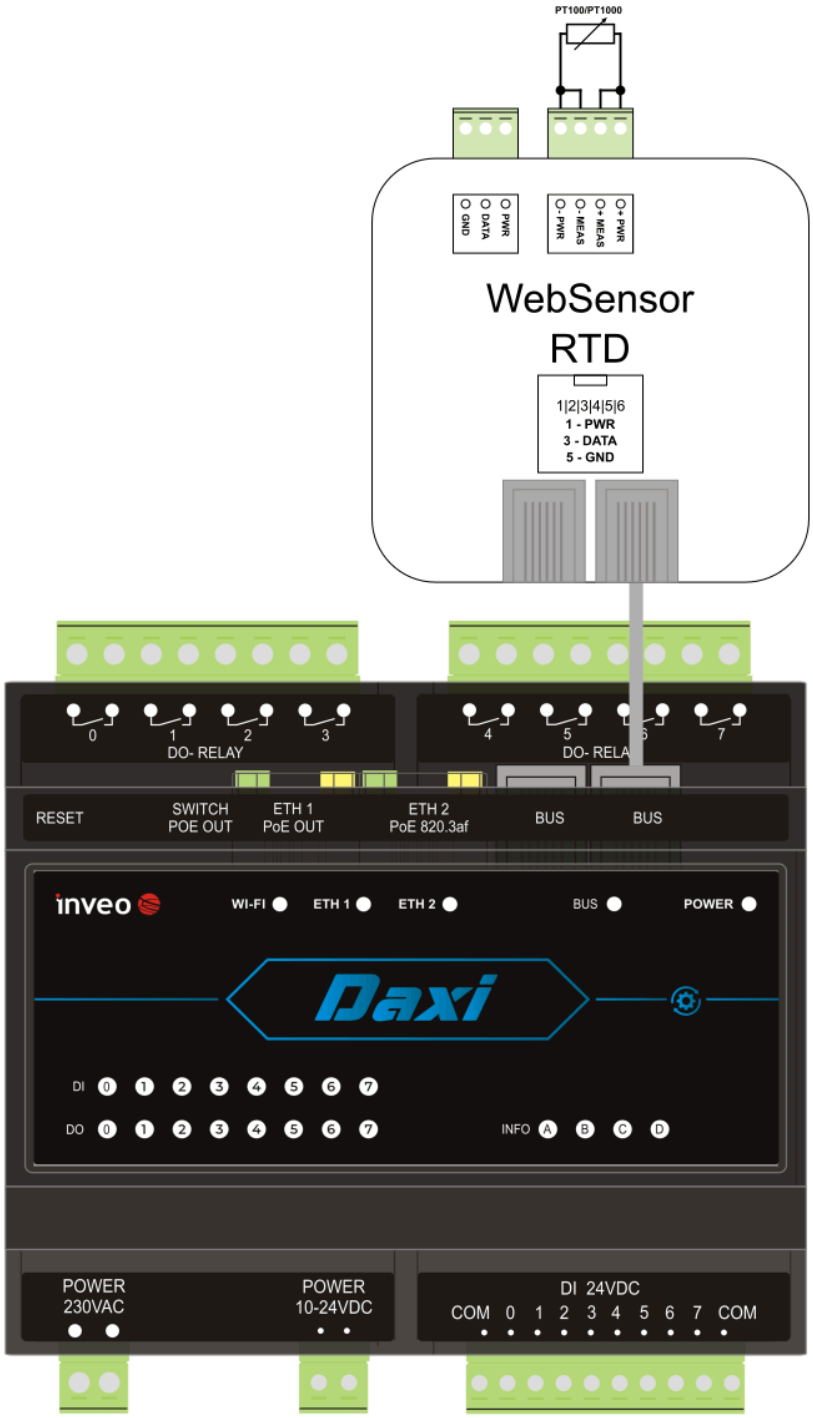

Terminal No.	WebSensor
1	VCC
3	Data
5	GND

IQIO

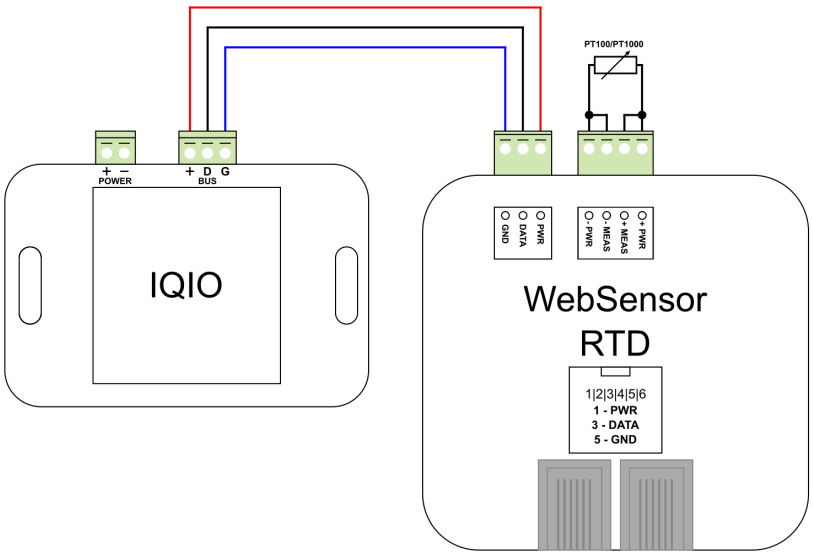

IQIO	WebSensor
BUS G	GND
BUS D	Data
BUS +	VCC/NC

Warranty and manufacturer's liability

> **Warning**
>
> **The manufacturer provides a two-year warranty for the device and post-warranty service for a period of 10 years from the date of introduction of the device to the market. The warranty covers all material and production defects.**

The manufacturer undertakes to respect the warranty agreement, if the following conditions are met:

- All repairs, changes, expansions and device calibrations are carried out by the manufacturer or an authorized service center,
- The power supply system meets the applicable standards,
- The device is operated in accordance with the suggestions presented in this manual,
- The device is operated in accordance with its intended purpose.

The manufacturer assumes no responsibility for consequences resulting from improper installation, improper use of the device, failure to comply with the instruction manual, and repairs made by unauthorized personnel.

> **Warning**
>
> **The device contains no user serviceable parts inside.**

Storage, operation and transport conditions

The device should be stored in enclosed rooms, where the atmosphere is free from vapours and corrosive substances:

- Environment temperature from -30°C to +60°C (-22°F - 140°F),
- Humidity from 25% to 90% (condensation unacceptable),
- Atmospheric pressure from 700 to 1060 hPa.

The device is intended to operate in the following conditions:

- Environment temperature from -10°C do +55°C (14°F - 131°F),
- Humidity from 30% to 75%,
- Atmospheric pressure from 700 to 1060 hPa.

Recommended transport conditions:

- Environment temperature from -40°C do +85°C (-40°F - 185°F),
- Humidity from 5% to 95%,
- Atmospheric pressure from 700 to 1060 hPa.

Installation and device operation:

- The module should be operated in accordance with recommendations provided later in this manual.

Disposal and decommissioning

In an event the device needs to be decommissioned (eg. after its intended life period is surpassed), it is recommended to contact the manufacturer or his representative, who are responsible to respond appropriately, i.e., to collect the device from the user. The user can alternatively contact companies specializing in electronic device or computer equipment disposal and/or decommissioning. Under no condition should the device be placed with other waste.