Inveo Sp. z o.o.

WebSensor T

Instruction Manual

Overview



Purpose of the device

The WebSensor T devices are designed to cooperate with Virtus, Daxi, IQIO, Hero Web Sensor, Nano Temp and Nano Temperature Sensor modules.

Table of contents

- Overview
  - Purpose of the device
- Device construction
  - Power supply
  - Technical characteristics
- Connecting sensors
  - Virtus, Daxi – RJ12 connector pinout
  - IQIO or Hero Web Sensor
  - Nano Temp/Nano Temperature Sensor PoE
- Warranty and manufacturer's liability
  - Storage, operation and transport conditions
  - Disposal and decommissioning

Device construction

Power supply

The sensors are intended to be powered directly from Virtus, Daxi, IQIO, Hero Web Sensor modules or with parasitic power from Nano Temp/Nano Temperature Sensor PoE.

Dimensions

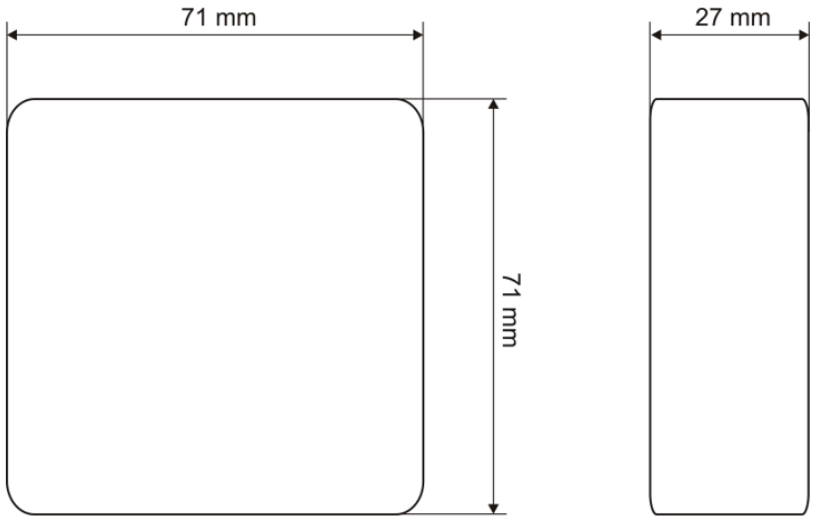

Enclosure

The mounting openings in the device enclosure allow the sensors to be mounted directly to a wall or in an 19 inch rack cabinet.

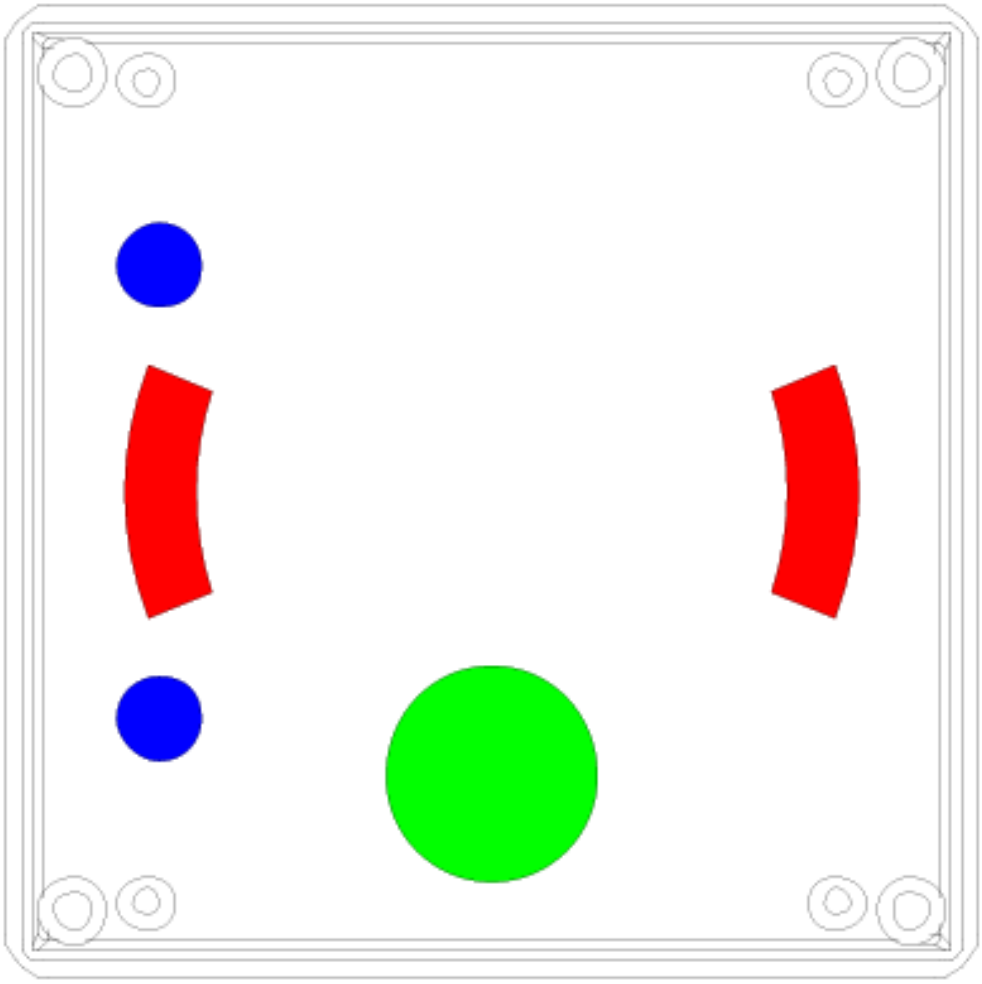

The colour green indicates the opening intended for the communication and power wiring.
Blue colour indicates openings used when mounting to a rack cabinet.
The openings marked with red allow the module to be installed on a wall with an expansion anchor. Its position can be adjusted.

Technical characteristics

	WebSensor T
Temperature sensor	DS18B20 mounted on the PCB **Measured temperature range:** from -55°C to +125°C (-67°F to +257°F) **Precision in the range beween -10°C and +85°C:** ± 0,5°C **Precision in the range between -55°C to +125°C:** ± 2°C

Connecting sensors

The WebSensor can be connected to a bus using a two- or three-wire (Virtus, IQIO, Hero Web Sensor) cable with a maximum core diameter of 1mm2 or with RJ12 connectors (Virtus, Daxi).

The sensor uses the 1-Wire bus, as such, additional sensors can be connected to make the bus longer and read the measured values from several sensors.

The RJ12 **Bus** connectors and the three-way screw terminals are connected in parallel.

Virtus, Daxi – RJ12 connector pinout

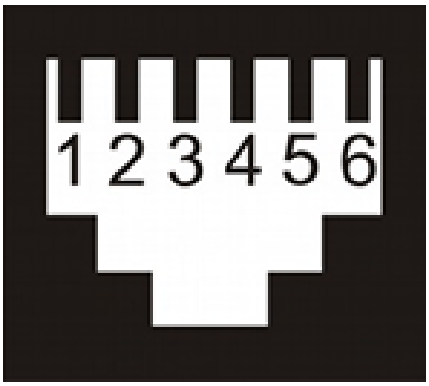

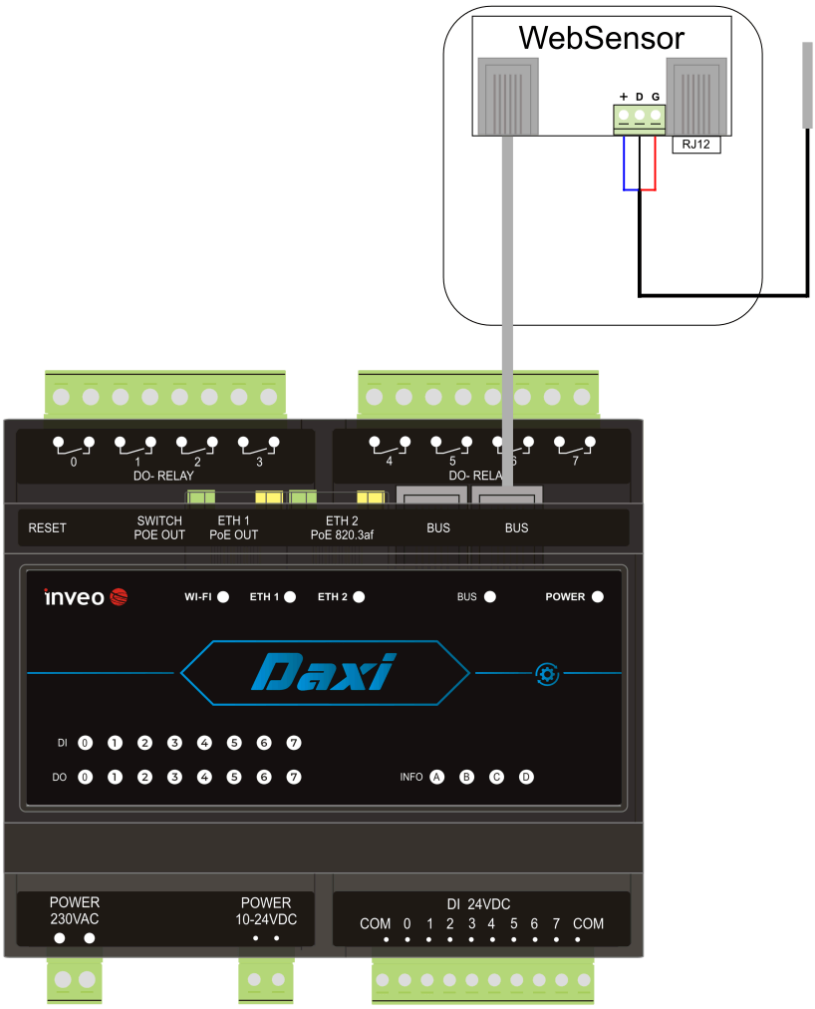

Terminal No.	WebSensor
1	VCC
3	Data
5	GND

IQIO or Hero Web Sensor

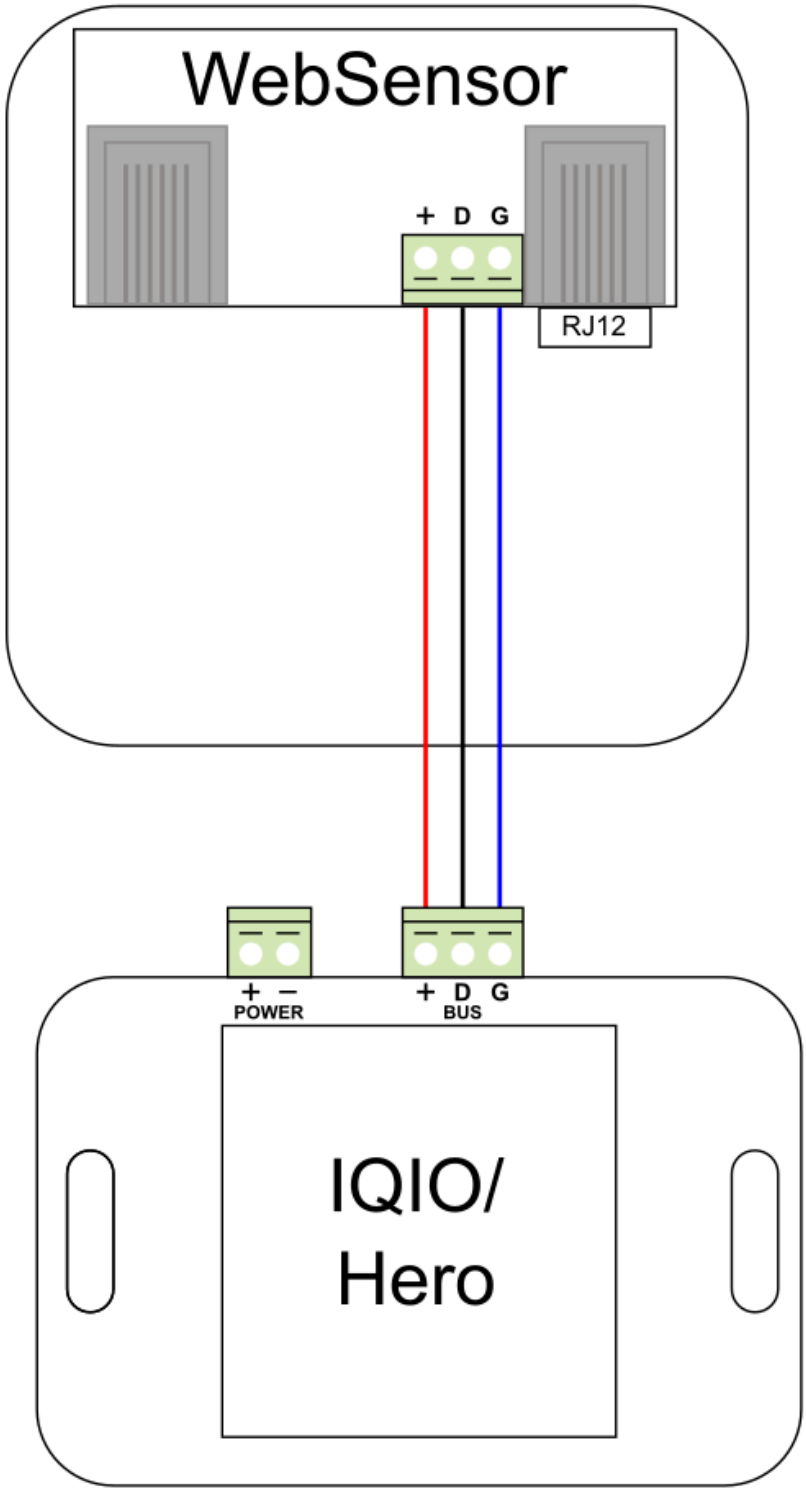

IQIO or Hero	WebSensor
BUS G	GND
BUS D	Data
BUS +	VCC

Nano Temp/Nano Temperature Sensor PoE

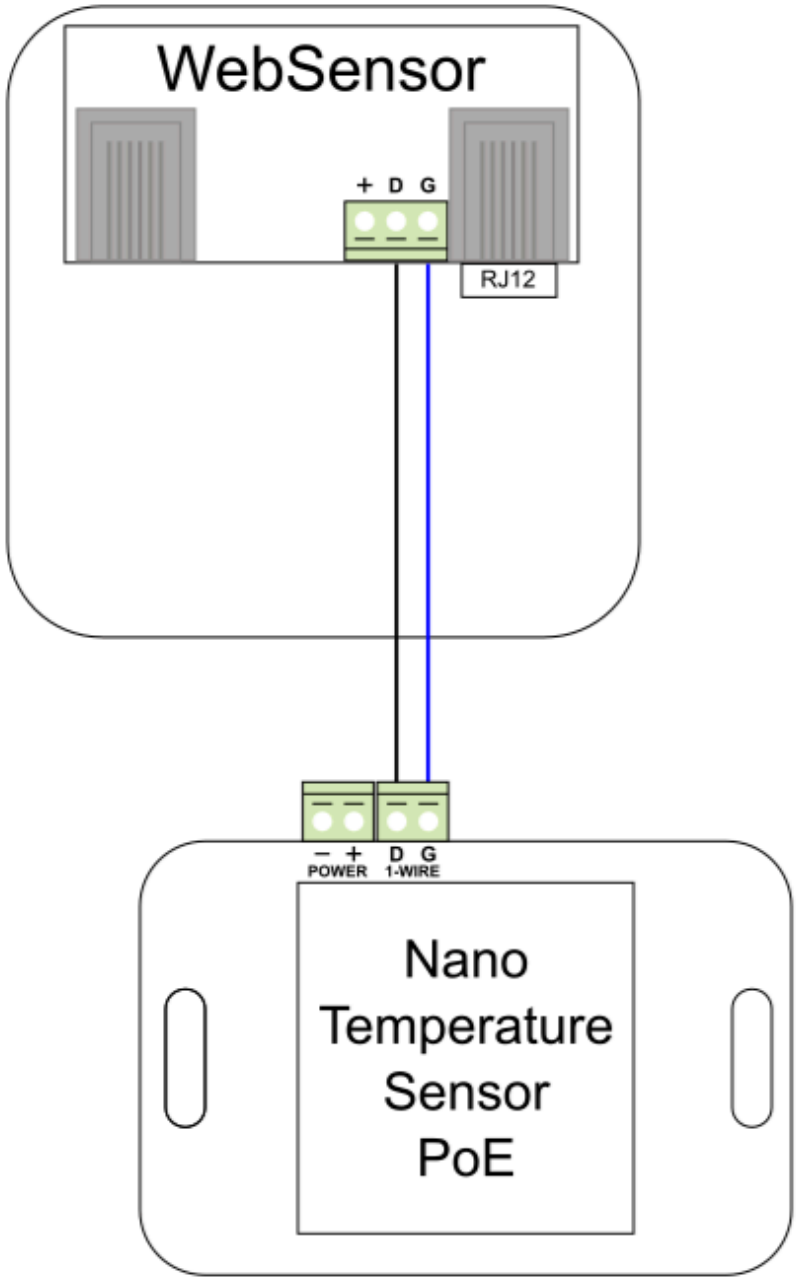

Nano Temperature Sensor	WebSensor
BUS Signal	Data
BUS GND	GND

Warranty and manufacturer's liability

> **Warning**
>
> **The manufacturer provides a two-year warranty for the device and post-warranty service for a period of 10 years from the date of introduction of the device to the market. The warranty covers all material and production defects.**

The manufacturer undertakes to respect the warranty agreement, if the following conditions are met:

- All repairs, changes, expansions and device calibrations are carried out by the manufacturer or an authorized service center,
- The power supply system meets the applicable standards,
- The device is operated in accordance with the suggestions presented in this manual,
- The device is operated in accordance with its intended purpose.

The manufacturer assumes no responsibility for consequences resulting from improper installation, improper use of the device, failure to comply with the instruction manual, and repairs made by unauthorized personnel.

> **Warning**
>
> **The device contains no user serviceable parts inside.**

Storage, operation and transport conditions

The device should be stored in enclosed rooms, where the atmosphere is free from vapours and corrosive substances:

- Environment temperature from -30°C to +60°C (-22°F - 140°F),
- Humidity from 25% to 90% (condensation unacceptable),
- Atmospheric pressure from 700 to 1060 hPa.

The device is intended to operate in the following conditions:

- Environment temperature from -10°C do +55°C (14°F - 131°F),
- Humidity from 30% to 75%,
- Atmospheric pressure from 700 to 1060 hPa.

Recommended transport conditions:

- Environment temperature from -40°C do +85°C (-40°F - 185°F),
- Humidity from 5% to 95%,
- Atmospheric pressure from 700 to 1060 hPa.

Installation and device operation:

- The module should be operated in accordance with recommendations provided later in this manual.

Disposal and decommissioning

In an event the device needs to be decommissioned (eg. after its intended life period is surpassed), it is recommended to contact the manufacturer or his representative, who are responsible to respond appropriately, i.e., to collect the device from the user. The user can alternatively contact companies specializing in electronic device or computer equipment disposal and/or decommissioning. Under no condition should the device be placed with other waste.